CABINETRY SPECIFICATION GUIDE | 2020

G-WOOD

CARB2 CERTIFICATION

Sandi Cabinet is proud to be a CARB2 Certifed kitchen cabinet manufacturer. Our cabinets comply with the rules and regulations of composite wood products established by the California Code of Regulations, nationally implemented by the EPA.

Items That We Make While...

Many Others don't Carry

* Small Vanity With Bottom Drawer
  VSD24 VSD27 VSD30
* Vanity Sink Base
  VS18 VS21 VS27 VS33
* Vanity Drawer Base
  3VDB21 3VDB24 3VDB27
* Kitchen Base
  BSDC6 B39 B42
* Kitchen Drawer Base
  3DB27 3DB33 3DB36
  2DB30 2DB33 2DB36
* Kitchen End Base
  BOE12 BEC24
* Kitchen Wall
  W3930 W3936 W3942
* Kitchen Stackable Wall
  W2118 W2418 W2718 DCW2418
* Kitchen Corner Base
  BBC36 LSB33 DCSB42 (Corner Sink Base)
* Kitchen Corner Wall
  DCW2736 DCW2742
  ERC2430 ERC2436 ERC2442 (90 Degree Corner)
* Pantry With Odd Height
  U1864 U1870 U1876 U1888 U18100
  U2464 U2470 U2476 U2488 U24100
* 36" Pantry With Drawers At the Bottom
  U3684 U3690 U3696

TABLE OF CONTENTS

Door Styles	
Shaker White	2
Shaker Grey	2
Shaker Espresso	2
Charleston Saddle	3
Charleston Antique White	3
Charleston Pure White	3
York Chocolate	4
Alton Stone Grey	4
Cabinet Construction	5
Wall Cabinets	6
Base Cabinets	19
Tall Cabinets	29
Bath Cabinets	33
Panels and Skins	37
Molding and Trim	43
Roll Outs	54
Trash Can Pull Out	55
Hardware	56
Touch-Up	53
Cleaning, Care, and Maintenance	57
Product and Finish Information	59
Warranty	60
Notes	74
Index	62

DOOR STYLES

Shaker White

Order Code: **SW**

- Full overlay door style
- Hardwood species
- Solid wood mortis and tenon stile and rail
- 5-piece drawer front
- Painted MDF center panel
- White paint

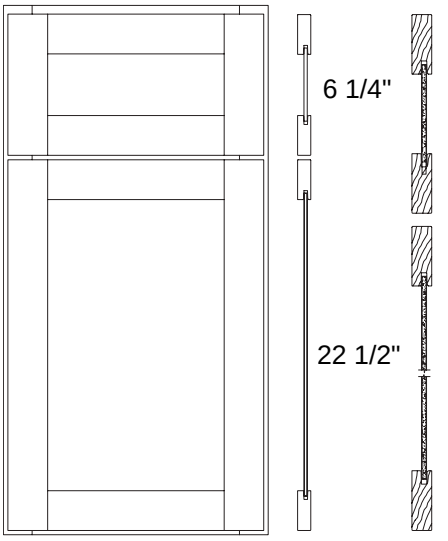

Shaker Grey

Order Code: **SG**

- Full overlay door style
- Hardwood species
- Solid wood mortis and tenon stile and rail
- 5-piece drawer front
- Painted MDF center panel
- Grey paint

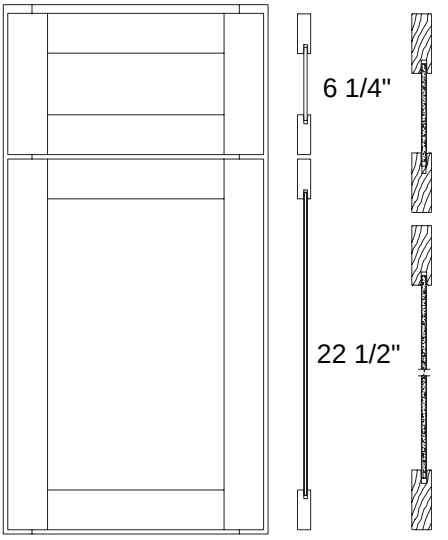

Shaker Espresso

Order Code: **SE**

- Full overlay door style
- Hardwood species
- Solid wood mortis and tenon stile and rail
- 5-piece drawer front
- Veneered MDF center panel
- Dark brown stain

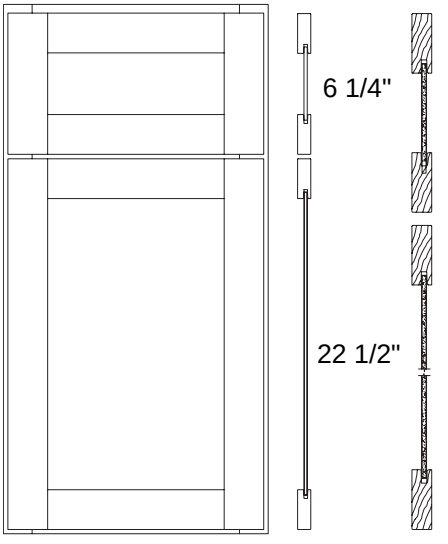

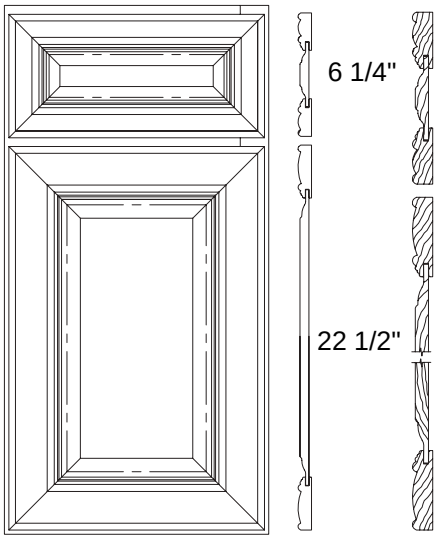

Charleston Saddle

Order Code: **CS**

- Full overlay door style
- Hardwood species
- Solid wood mitered stile and rail
- 5-piece drawer front
- Solid wood center panel
- Mid-tone brown stain with burnishing stain

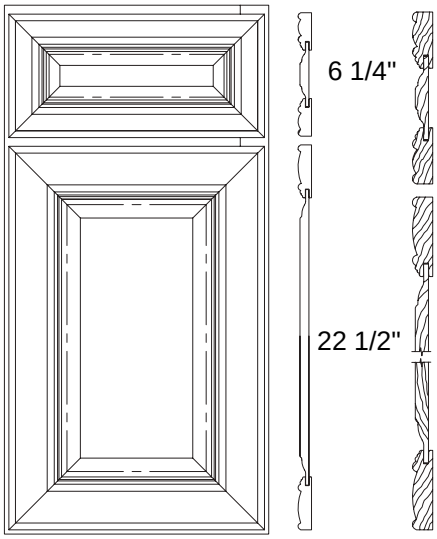

Charleston Antique White

Order Code: **CW**

- Full overlay door style
- Hardwood species
- Solid wood mitered stile and rail
- 5-piece drawer front
- Painted MDF center panel
- Cream paint with caramel glaze

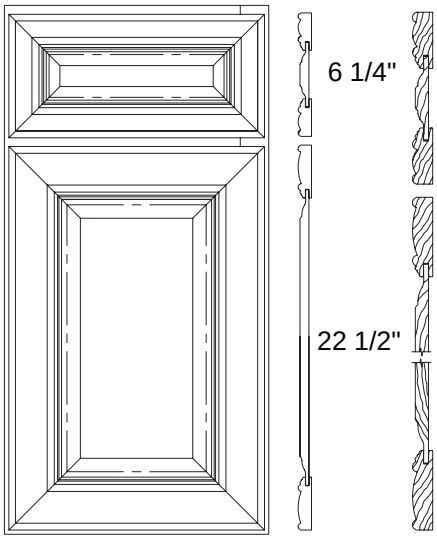

Charleston Pure White

Order Code: **PW**

- Full overlay door style
- Hardwood species
- Solid wood mitered stile and rail
- 5-piece drawer front
- Solid wood center panel
- Pure white paint

DOOR STYLES

York Chocolate

Order Code: **YC**

- Full overlay door style
- Hardwood species
- Solid wood mitered stile and rail
- 5-piece drawer front
- Painted MDF center panel
- Brown stain with black glaze

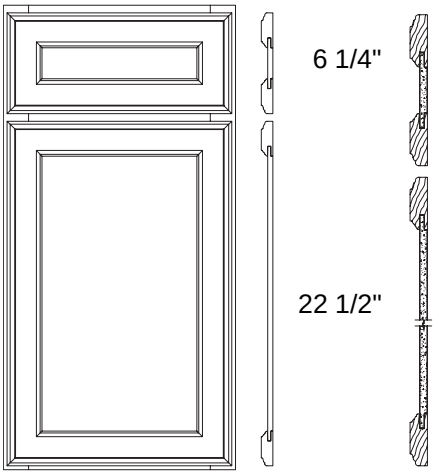

Alton Stone Grey

Order Code: **AG**

- Full overlay door style
- Hardwood species
- Solid wood mortis and tenon stile and rail
- 5-piece drawer front
- Painted MDF center panel
- Charcoal Grey Stain
- Unique Easy Clean Profile

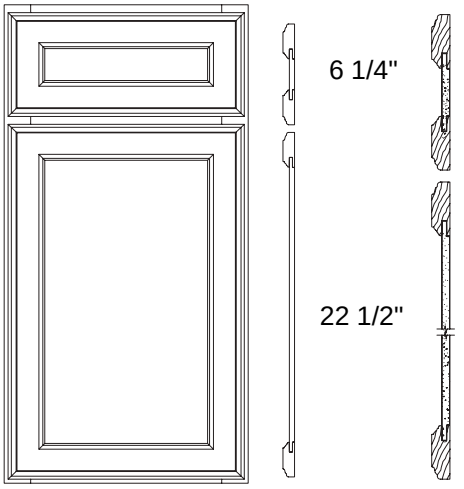

NOTES

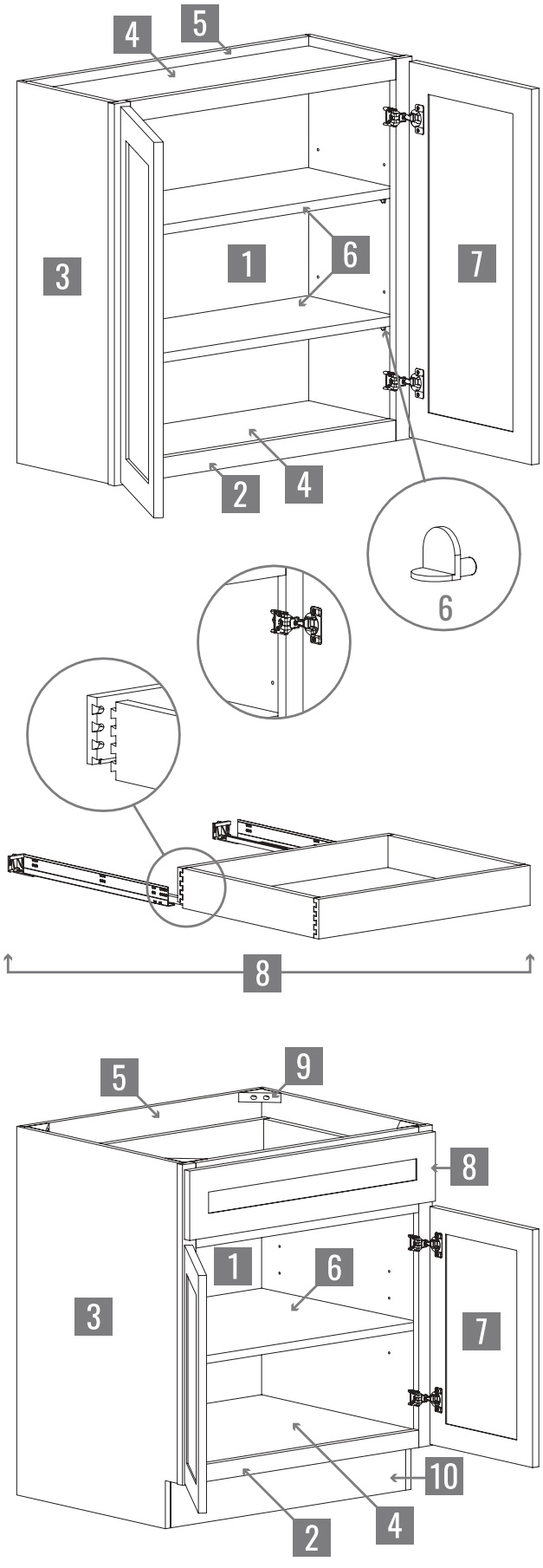

1 • INTERIOR
Veneered Natural hardwood interior
2 • FACE FRAME
3/4" solid hardwood face frame
3 • END PANELS
1/2" veneered plywood end panels with white exterior fnish
4 • FLOOR & CEILING PANELS
1/2" veneered plywood, captured foor and ceiling panels with natural finish
5 • BACK PANEL
1/2" framed with plywood back
6 • SHELVING
3/4" veneered plywood, full depth, adjustable shelving with metal shelf clips
7 • DOOR FRONT
Full overlay, solid hardwood stile and rail with 6-way adjustable, concealed, soft close hinges
8 • DRAWER BOX
Full overlay drawer front with 3/4” finger jointed hardwood, dovetail drawer box with 3/8” veneered plywood bottom and full extension, undermount, soft close drawer glides (rated 100 lbs.)
9 • CORNER BRACES
7/8" solid wood corner braces
10 • TOE KICK
4 1/2" high and 1/2" thick veneered plywood, unfinished toe kick

WALL CABINETS

CABINET IDENTIFICATION

The letter(s) represent the type of cabinet, the first set of numbers represents the width of the cabinet, and the second set of numbers represents the height of the cabinet.

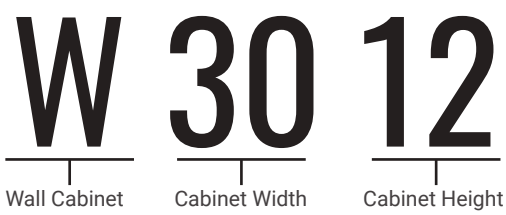

Whenever a cabinet is shorter or deeper than the standard 12” for wall cabinets, it is represented by a third set of numbers.

ORDER CODING

All wall cabinet order coding begins with the door order code
Example: **SW W1830**

SPECIAL NOTES

- Wall cabinetry is 12" deep less otherwise noted
- Single door wall cabinetry is hinged on the right side of the face frame but can be flipped as necessary

AVAILABILITY KEY

●	Indicates availability
	Indicates no availability

Look for the light bulb for helpful design tips!

Wall Bridge Double Door 12” High

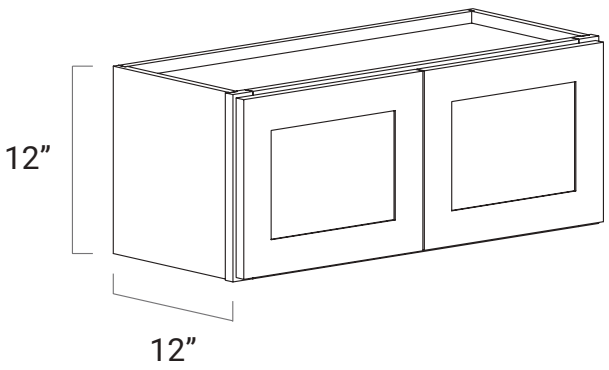

Order Code: **W3012**
W3612

- No shelf

●	SW
●	SG
●	SE
●	CS
●	CW
●	PW
●	YC
●	AG

Wall Bridge Double Door 15” High

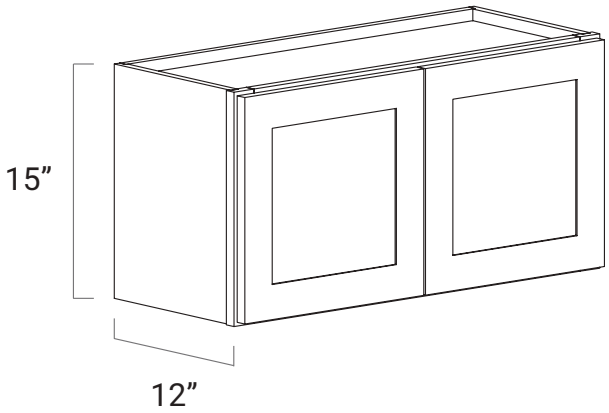

Order Code: **W3015**
W3615

- No shelf

●	SW
●	SG
●	SE
●	CS
●	CW
●	PW
●	YC
●	AG

Wall Bridge Double Door 18” High

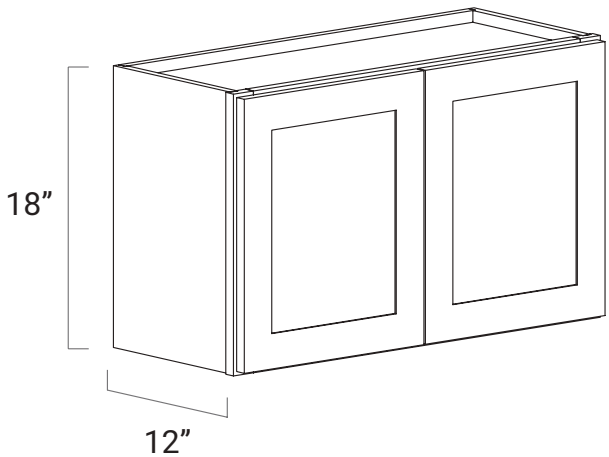

Order Code: **W2118***
W2418*
W2718*
W3018
O3318**
W3618

- No shelf

* Stackable, Pls call for availability

(**) Modified from O331824

●	SW
●	SG
●	SE
●	CS
●	CW
●	PW
●	YC
●	AG

WALL CABINETS

Wall Bridge Double Door 21” High

Order Code: **W3021**
O3321*
W3621

- No shelf

SW
SG
SE
CS
CW
PW
YC
AG

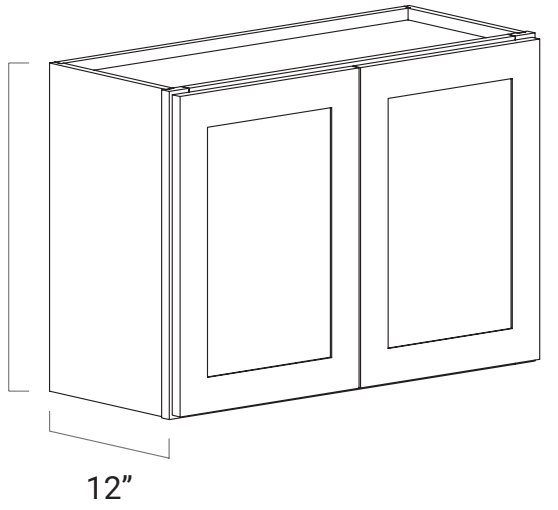

**Modified from O332124*

Wall Bridge Double Door 24” High

Order Code: **W3024**
W3324*
W3624

- One adjustable shelf

SW
SG
SE
CS
CW
PW
YC
AG

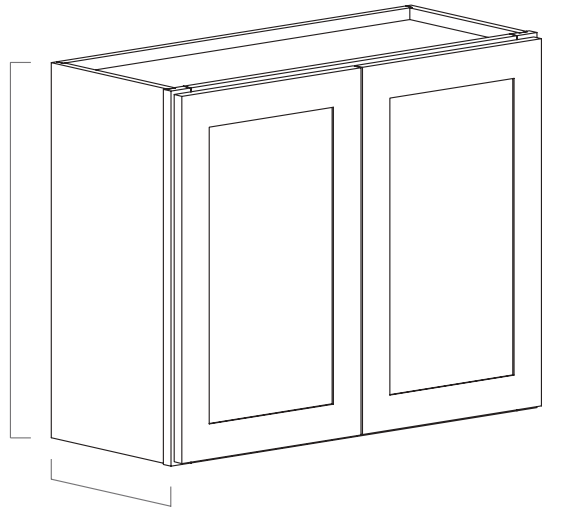

**Modified from O332424*

Oven Upper Cabinet Double Door 24” Deep

Order Code:
O331824
O332124*
O332424
O333024

SW
SG
SE
CS
CW
PW
YC
AG

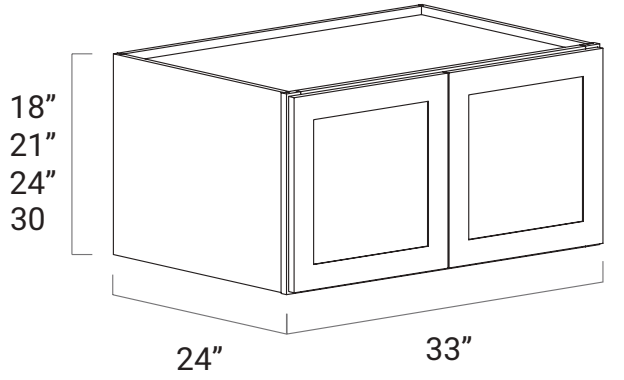

- One adjustable shelf for 24"/30" H
- Can be used as Refridgerator Cabinet

**Can be used as Farmer Sink Base*

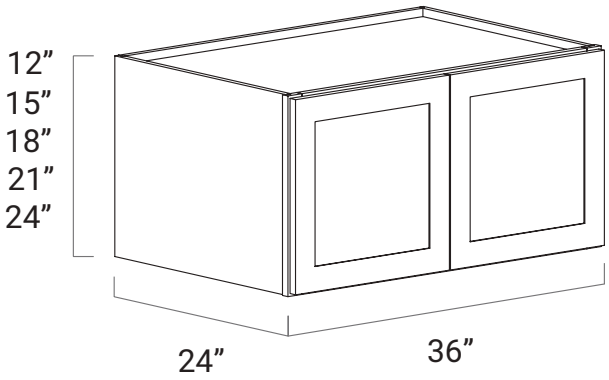

Wall Bridge Refrigerator Double Door 24” Deep

Order Code: **W361224**
W361524
W361824
W362124*
W362424

●	SW
●	SG
●	SE
●	CS
●	CW
●	PW
●	YC
●	AG

- One adjustable shelf *(W362424 Only)*

***** *Can be used as Farmer Sink Base*

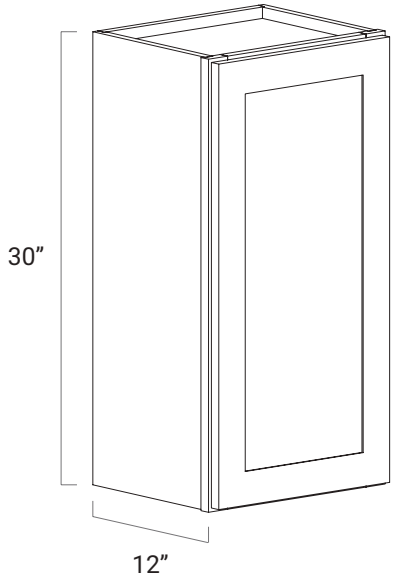

Wall Single Door 30” High

Order Code: **W0930**
W1230
W1530
W1830
W2130

●	SW
●	SG
●	SE
●	CS
●	CW
●	PW
●	YC
●	AG

- Two adjustable shelves

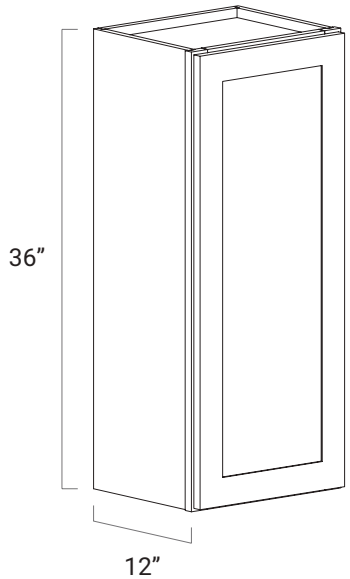

Wall Single Door 36” High

Order Code: **W0936**
W1236
W1536
W1836
W2136

●	SW
●	SG
●	SE
●	CS
●	CW
●	PW
●	YC
●	AG

- Two adjustable shelves

WALL CABINETS

Wall Single Door 42” High

Order Code: **W0942**
W1242
W1542
W1842
W2142

- Three adjustable shelves

●	SW
●	SG
●	SE
●	CS
●	CW
●	PW
●	YC
●	AG

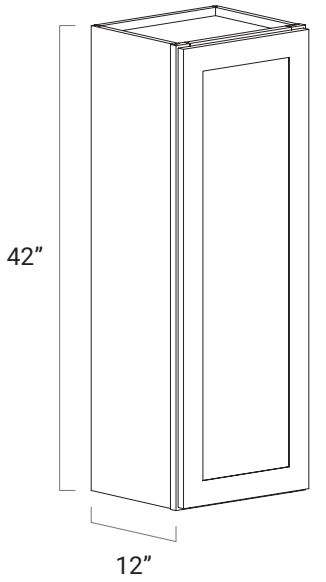

Wall Double Door 30” High

Order Code: **W2430**
W2730
W3030
W3330
W3630
W3930 *

- Two adjustable shelves

***** *Available for SW, AG, PW*

●	SW
●	SG
●	SE
●	CS
●	CW
●	PW
●	YC
●	AG

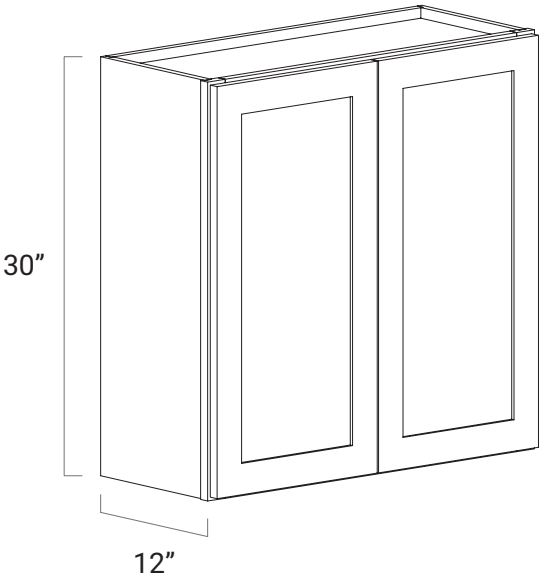

Wall Double Door 36” High

Order Code: **W2436**
W2736
W3036
W3336
W3636
W3936 *

- Two adjustable shelves

***** *Available for SW, AG, PW*

●	SW
●	SG
●	SE
●	CS
●	CW
●	PW
●	YC
●	AG

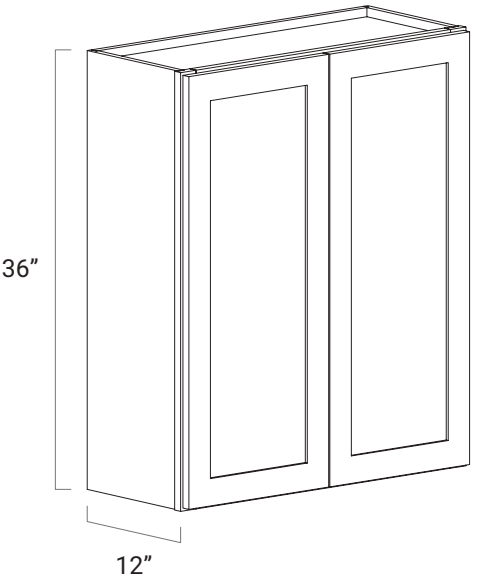

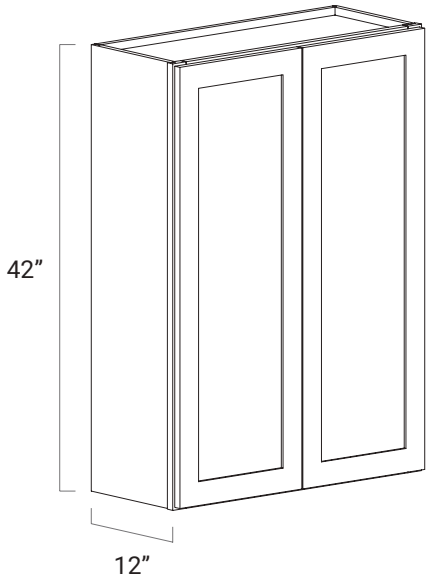

Wall Double Door 42” High

Order Code: **W2442**
W2742
W3042
W3342
W3642
W3942*

- Three adjustable shelves

**Available for SW, AG, PW*

●	SW
●	SG
●	SE
●	CS
●	CW
●	PW
●	YC
●	AG

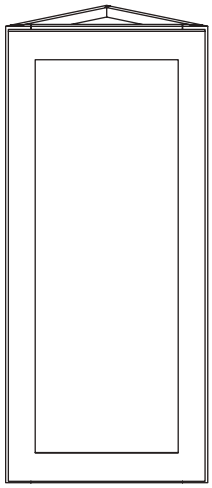

Angled Triangle Wall

Order Code: **AW1230**
AW1236
AW1242

●	SW
●	SG
●	SE
●	CS
●	CW
●	PW
●	YC
●	AG

- **AW1230** *has two adjustable shelves*
- **AW1236** *has two adjustable shelves*
- **AW1242** *has three adjustable shelves*

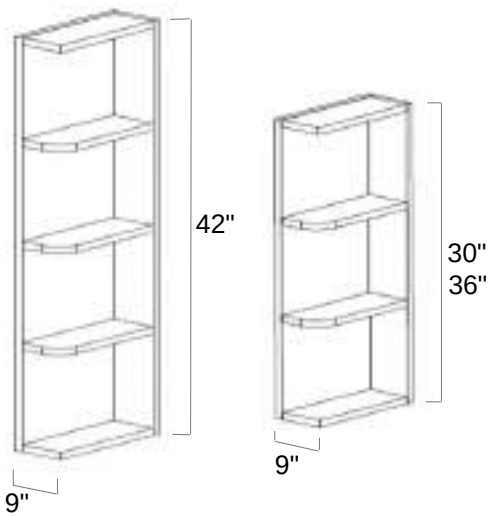

End Shelf Wall

Order Code: **OE0930**
OE0936
OE0942

●	SW
●	SG
●	SE
●	CS
●	CW
●	PW
●	YC
●	AG

*We still have some OE0630/0636/0642 available
OE1230/1236/1242
Please call us to check availability

WALL CABINETS

Wall Diagonal Corner 12” Deep

Order Code: **DCW2430**
DCW2436
DCW2442*

●	SW
●	SG
●	SE
●	CS
●	CW
●	PW
●	YC
●	AG

- 12” deep, 24” wide
- Two adjustable shelves

*(*) **WDC2442** has three adjustable shelves*

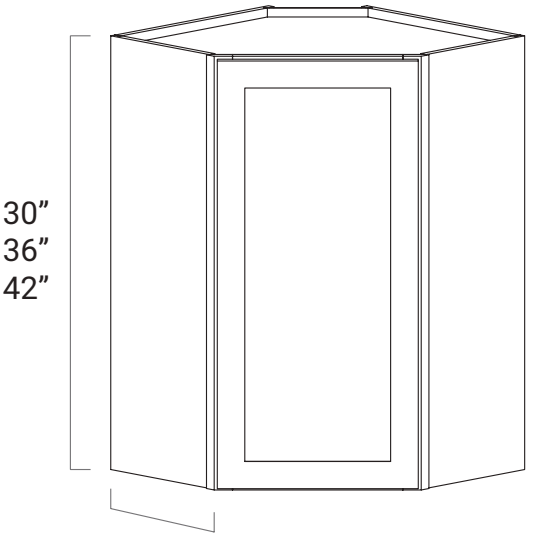

TOP VIEW

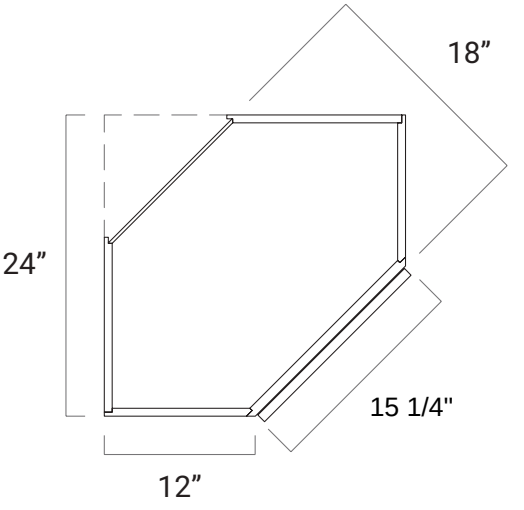

Build out 3” from wall to portray deeper sides (dimensional)

Stackable Wall Diagonal Corner 12” Deep

Order Code: **DCW2418**

●	SW
	SG
	SE
	CS
	CW
●	PW
	YC
●	AG

- 12” deep, 24” wide
- No shelves

* *Stackable, Pls call for availability*

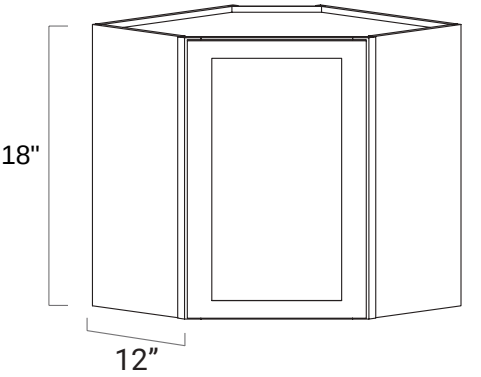

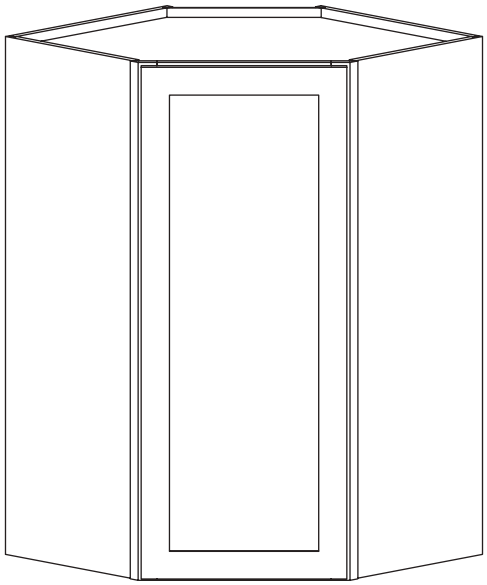

Wall Diagonal Corner 15” Deep

Order Code: **DCW2736**
DCW2742*

●	SW
●	SG
●	SE
●	CS
●	CW
●	PW
●	YC
●	AG

- 15” deep, 27” wide
- Two adjustable shelves
- Design with straggered height wall cabinets, allowing crown on adjacent cabinetry to tie into 15” deep sides

* FRAME/DOOR are the same as DCW2436/2442

TOP VIEW

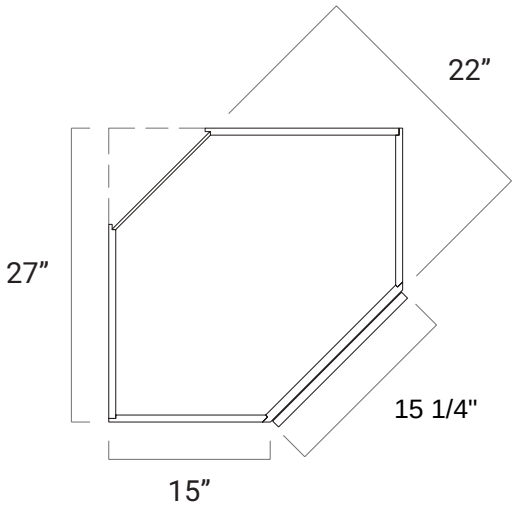

NOTES

WALL CABINETS

Wall Blind Corner

Order Code: **WBC2730**
WBC2736
WBC2742*

●	SW
●	SG
●	SE
●	CS
●	CW
●	PW
●	YC
●	AG

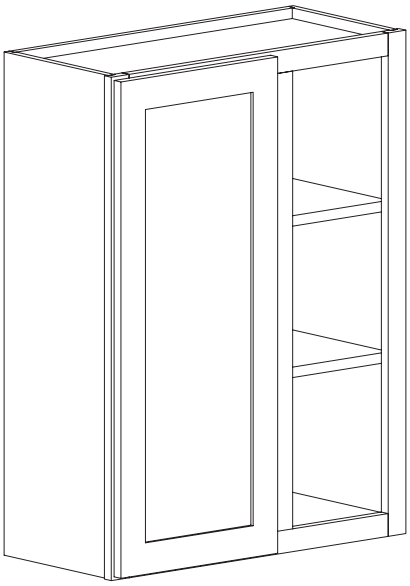

- 27” wide
- Two adjustable shelves
- Must be pulled 1” from the adjacent wall for a total of 28” wide
- 3” wall filler included
- Cabinet can be flipped for left/right application
- Hinges are located on center stile of the face frame and can be flipped as necessary

(*) **WBC2742** *has three adjustable shelves*

FACE FRAME
OPENING DIMENSIONS

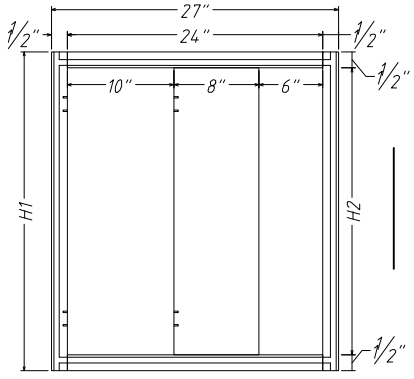

INSTALLATION DIAGRAM

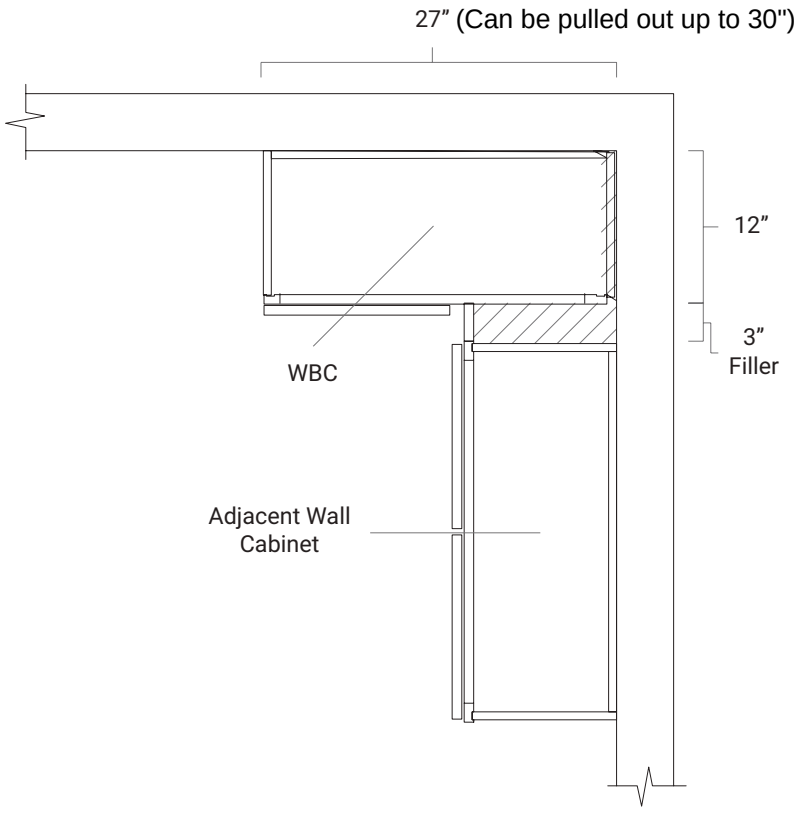

Wall Range Hood Front Structure

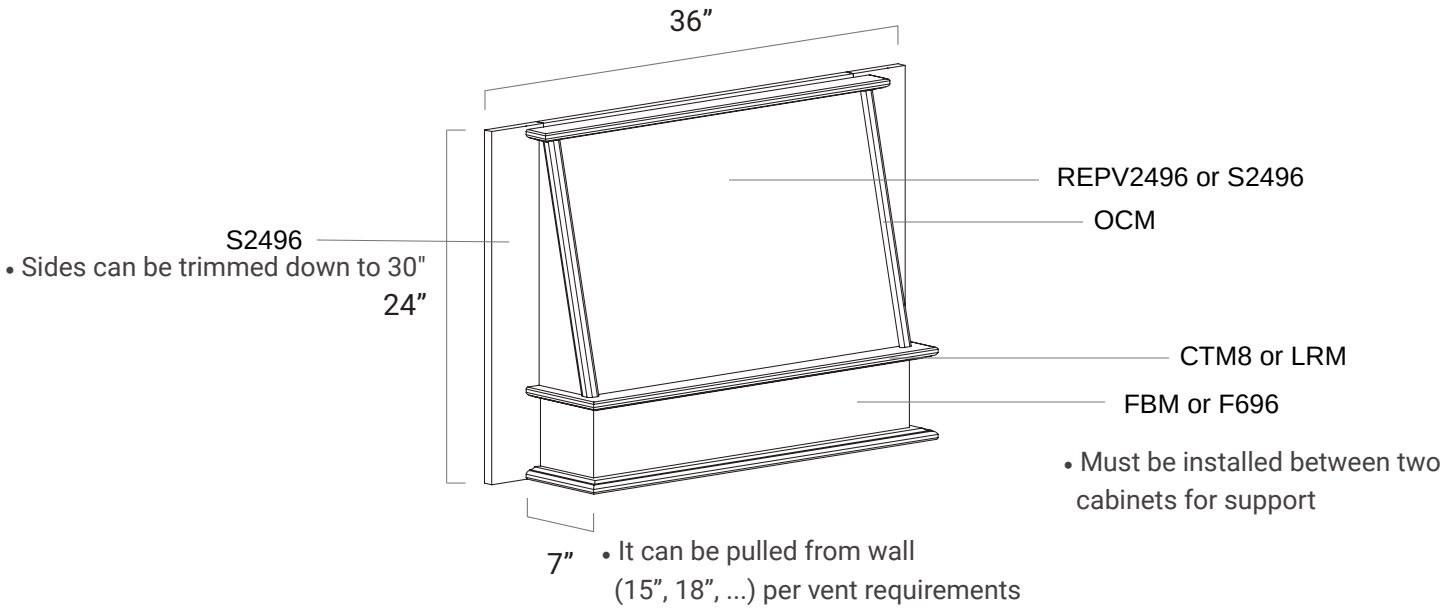

INSTALLATION DIAGRAM

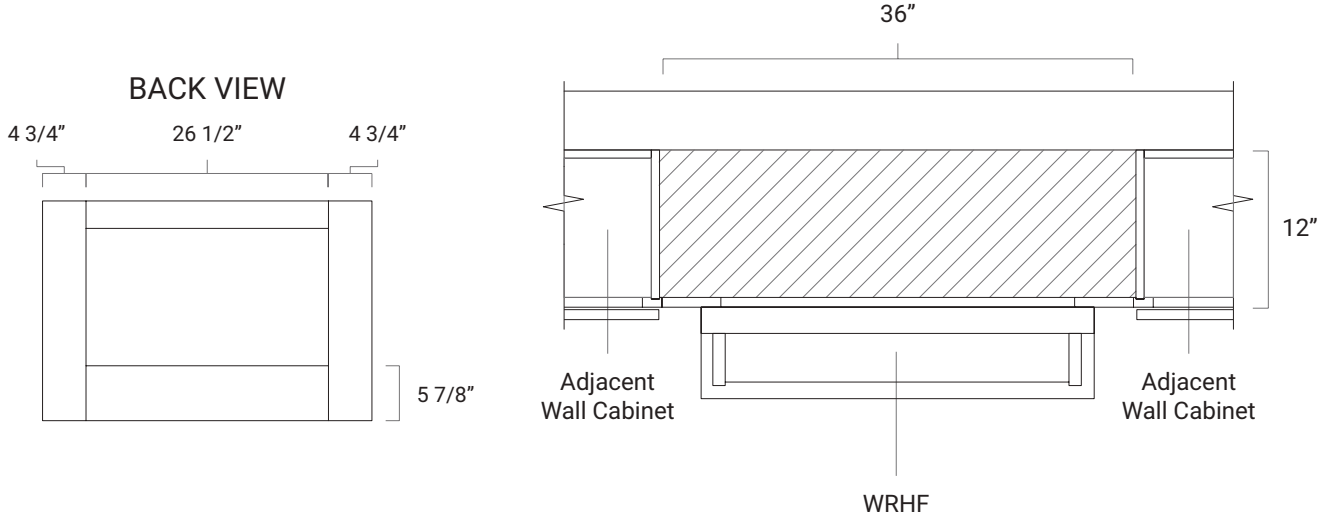

NKBA STANDARD COOKING SURFACE CLEARANCE

RECOMMENDED

- Allow 24” of clearance between the cooking surface and a protected, non-combustible surface (e.g. a range hood) above it.

CODE REQUIREMENT

- At least 30” of clearance is required between the cooking surface and an unprotected, combustible surface (e.g. cabinetry) above it.*
- If a microwave hood is used, then the manufacturer’s specifications should be followed.

(*) IRC M 1901.1 and IRC G 244705

Source: National Kitchen and Bath Association

WALL CABINETS

Wall Easy Reach

Order Code: **ERC2430***
ERC2436
ERC2442**

- Bi-folding door
- Two adjustable shelves
- Soft close not available

●	SW
●	SG
●	SE
●	CS
●	CW
●	PW
●	YC
●	AG

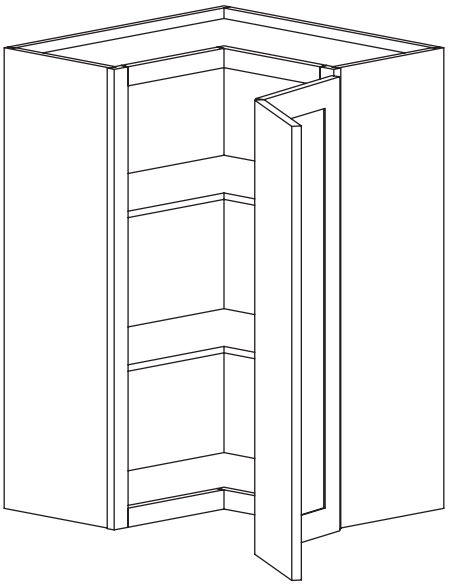

TOP VIEW

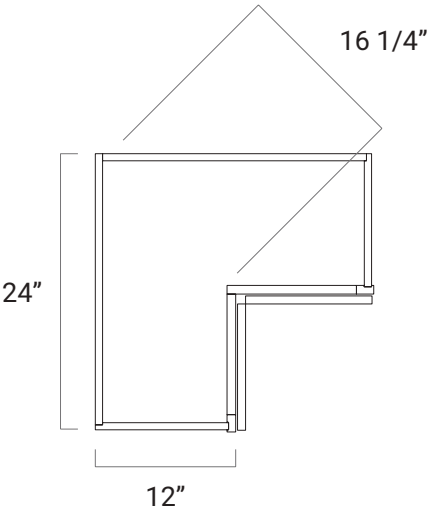

*ERC2430 shares door&frame with LSB36
*(**)*ERC2442 has 3 shelves

Wall Microwave Cabinet*

Order Code: **MO3030**
MO3036
MO3042

●	SW
●	SG
●	SE
●	CS
●	CW
●	PW
●	YC
●	AG

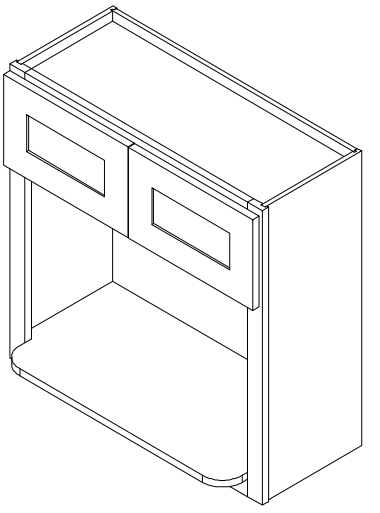

*They will be discontinued and replaced with MO3018 + W3012/W3018/W3024
(Pg.17)

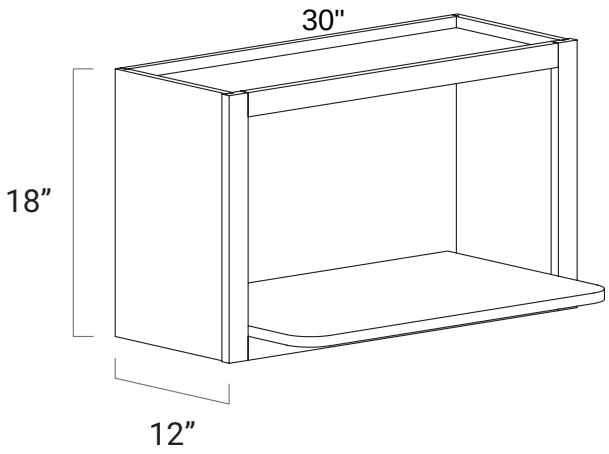

Wall Microwave

Order Code: **MO3018**

- Intended for “countertop” style microwave
- Unfinished interior
- Finished shelf is 5/8” thick and 15” deep

●	SW
●	SG
●	SE
●	CS
●	CW
●	PW
●	YC
●	AG

OPENING DIMENSIONS

	WIDTH	HEIGHT	DEPTH
Interior Dimension	28 1/4"	14 1/4"	10 5/8"
Frame Opening w/Shelf	26 3/4"	14"	17 1/2"

Wine Rack

Order Code: **WRC3015**

*Can be used as Towel Holder cabinet

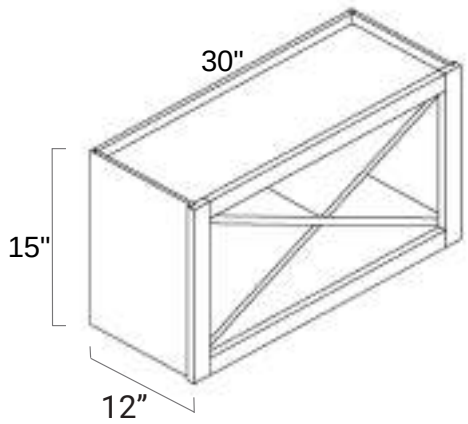

●	SW
	SG
	SE
	CS
	CW
●	PW
	YC
●	AG

Wine Rack

Order Code: **WRC3018**
WRC2430

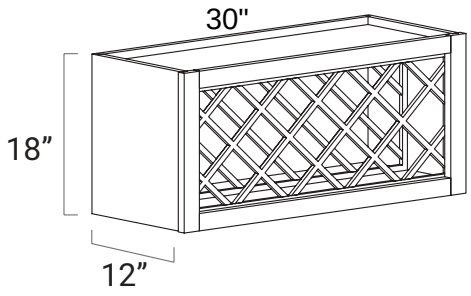

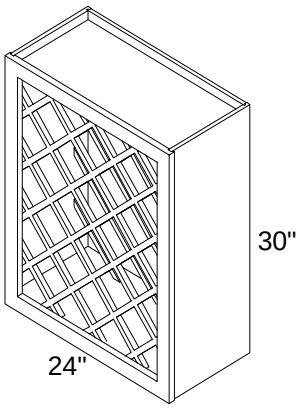

●	SW
●	SG
●	SE
●	CS
●	CW
●	PW
●	YC
●	AG

- Finished interior
- Can be used horizontally or vertically
- Can be used in a wall or base application

WALL CABINETS

Wall Plate Rack

Order Code: **PR3015**

- Can hold 10 plates

●	SW
●	SG
●	SE
●	CS
●	CW
●	PW
●	YC
●	AG

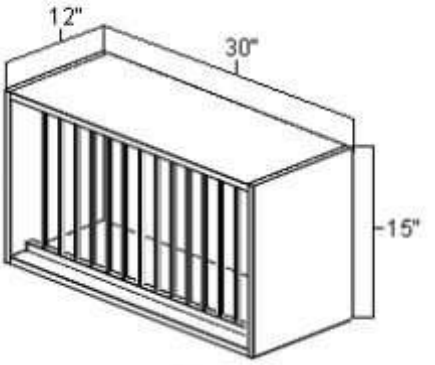

Wine Glass Holder

Order Code: **SGH30**

●	SW
●	SG
●	SE
●	CS
●	CW
●	PW
●	YC

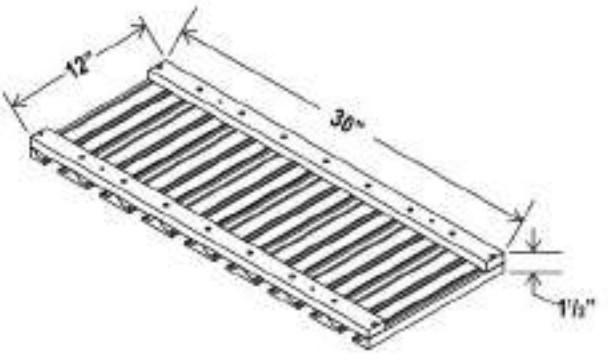

Cut Glass for Door*

Order Code: **GD WXX30**
GD WXX36
GD WXX42

• Glass not included

*Pls call for availability

●	SW
●	SG
●	SE
●	CS
●	CW
●	PW
●	YC
●	AG

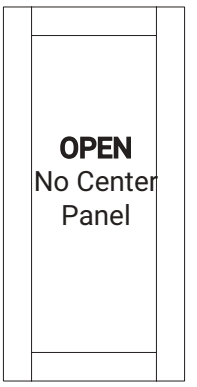

CABINET IDENTIFICATION

The letter(s) represent the name of the cabinet, and the following set of numbers represents the width of the cabinet.

B 24

Base Cabinet — Cabinet Width

Whenever a base cabinet has all drawers and no doors, also known as a drawer base, the cabinet code will start with a number. This represents the number of drawers the cabinet has.

3 DB 24

3 Drawers — Drawer Base Cabinet — Cabinet Width

ORDER CODING

All base cabinet order coding begins with the door order code
Example: **AG BT9**

SPECIAL NOTES

- Base cabinetry is 24" deep less otherwise noted
- Single and bi-fold door base cabinetry is hinged on the right side of the face frame but can be flipped as necessary

AVAILABILITY KEY

●	Indicates availability
	Indicates no availability

Look for the light bulb for helpful design tips!

BASE CABINETS

Base Spice Drawer

Order Code: **BSDC6**

●	SW
●	SG
●	SE
●	CS
●	CW
●	PW
●	YC
●	AG

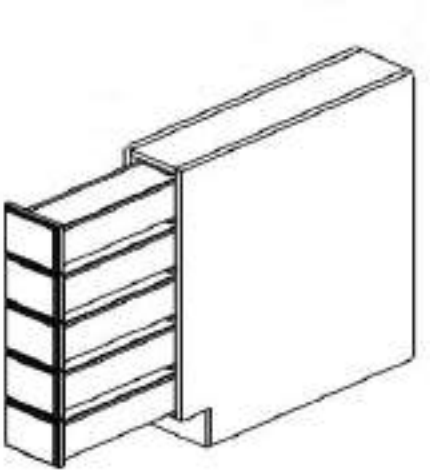

*The **BSDC6** is a great cabinet to use for kitchen towels, sponges, and bags, etc.*

Base Single Door

Order Code: **BT9** *
B12
B15
B18
B21

●	SW
●	SG
●	SE
●	CS
●	CW
●	PW
●	YC
●	AG

- One adjustable shelf

*We only make Full-Height-Door Base9

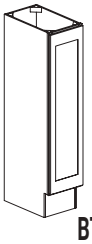

BT9

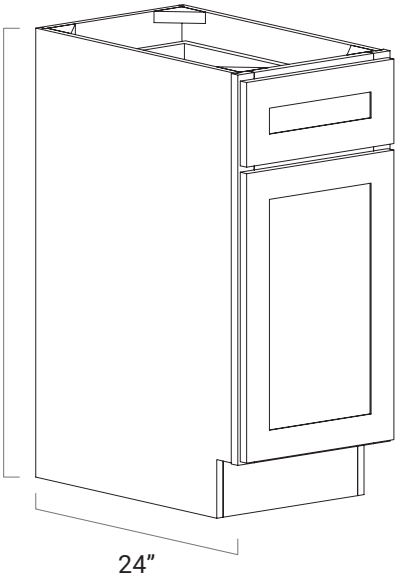

*The **BT9** is a great cabinet to use for storing trays, baking sheets, and cutting boards.*

Base Double Door

Order Code: **B24**
B27
B30
B33
B36
B39 *
B42 *

●	SW
●	SG
●	SE
●	CS
●	CW
●	PW
●	YC
●	AG

- One adjustable shelf

*Come with 2 drawers on the top

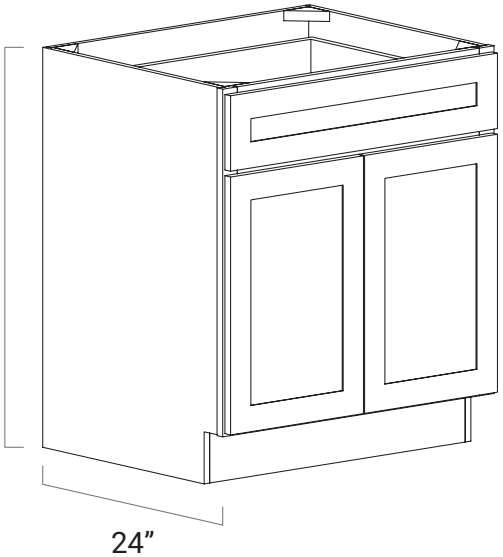

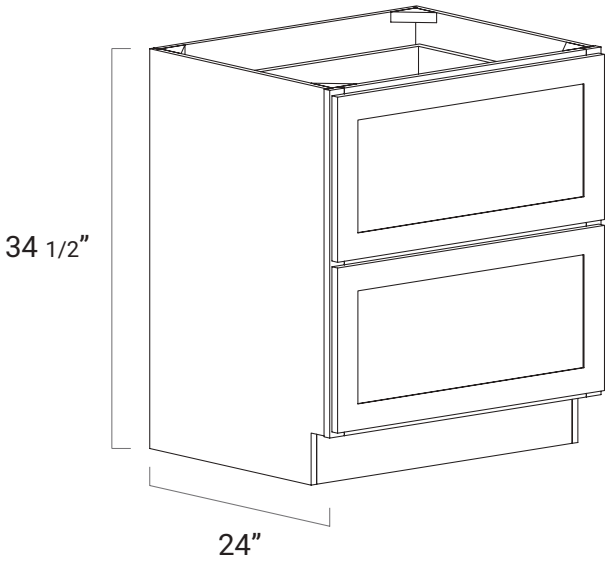

Two Drawer Base

Order Code: **2DB30**
2DB33
2DB36

- Two deep drawers
- Heavy load-bearing, full extension glides
  - Rated for 100 lbs.

●	SW
●	SG
●	SE
●	CS
●	CW
●	PW
●	YC
●	AG

Great for storing pots and pans near a cooking station.

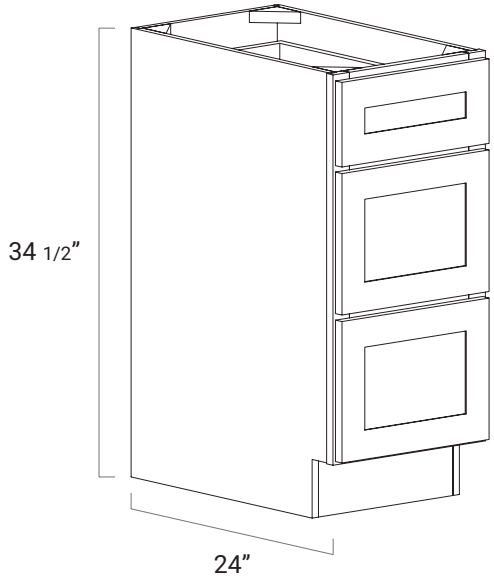

Three Drawer Base

Order Code: **3DB12**
3DB15 **3DB18**
3DB21 **3DB24**
3DB27 **3DB30**
3DB33 **3DB36**

- Three deep drawers
- Top drawer aligns with standard base cabinetry

●	SW
●	SG
●	SE
●	CS
●	CW
●	PW
●	YC
●	AG

Wider drawer bases are great for storing utensils, pots, and pans near a cooking station.

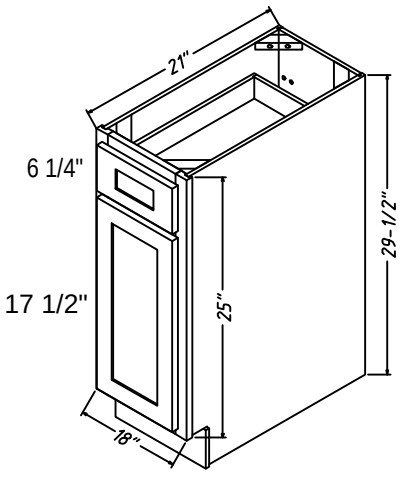

File Base 18

Order Code: **DFB18**

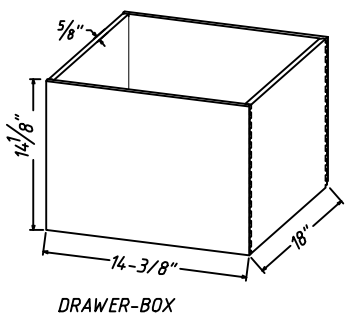

●	SW
●	SG
●	SE
●	CS
●	CW
●	PW
●	YC
●	AG

Perfect for making office desk out of it.

BASE CABINETS

Sink Base

Order Code: **SB30**
SB33
SB36

- False drawer front

●	SW
●	SG
●	SE
●	CS
●	CW
●	PW
●	YC
●	AG

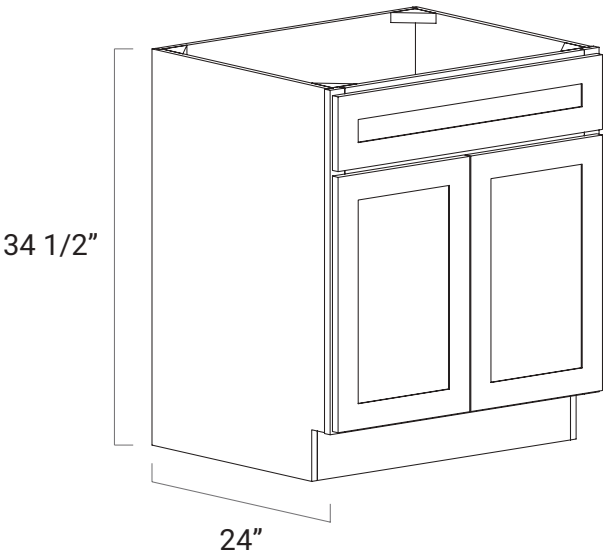

Sink Base Diagonal

Order Code: **DCSB42**

- False drawer front
- No shelf

●	SW
●	SG
●	SE
●	CS
●	CW
●	PW
●	YC
●	AG

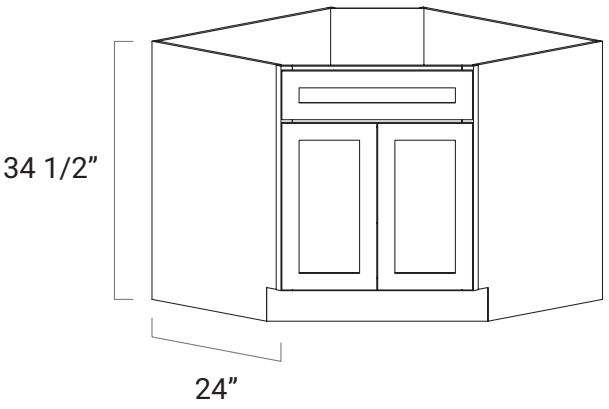

When using a corner sink application, it is recommended that a dishwasher be set at least 15” apart from the sink cabinet to allow for standing room and functionality.

TOP VIEW

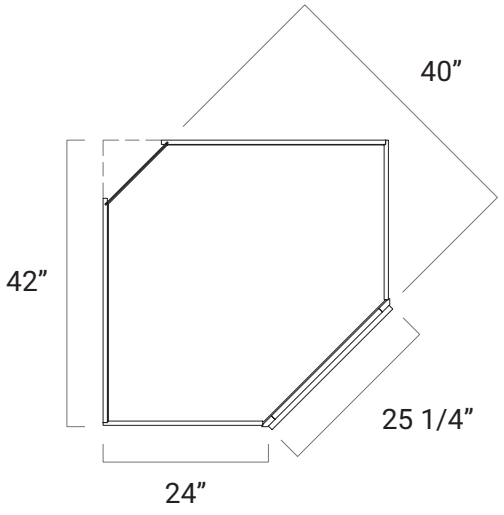

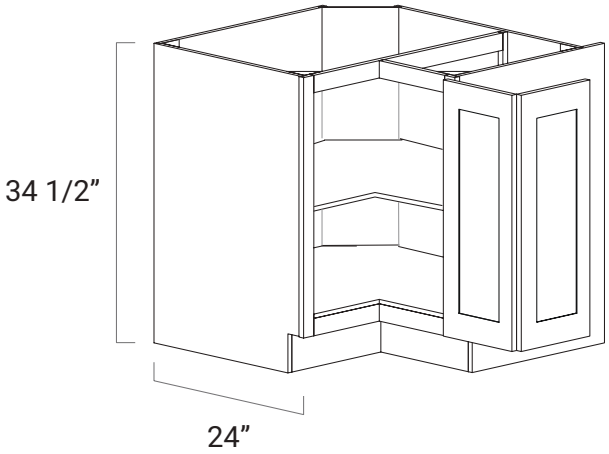

Lazy Susan*

Order Code: **LSB33**
LSB36

●	SW
●	SG
●	SE
●	CS
●	CW
●	PW
●	YC
●	AG

- Full shelf
- Full height, bi-folding door
- Soft close not available
- Magnetic door catch attached
- Designed to prevent warpage

TOP VIEW

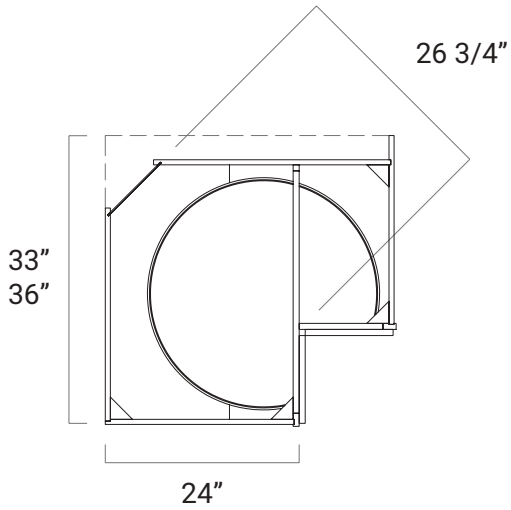

* Wooden tray are not included, need to be purchased seperately.

When positioning against an appliance, such as a range or refrigerator, place the hinge on the opposite side of the appliance. This allows the door to open past 90 degrees for maximum cabinet access.

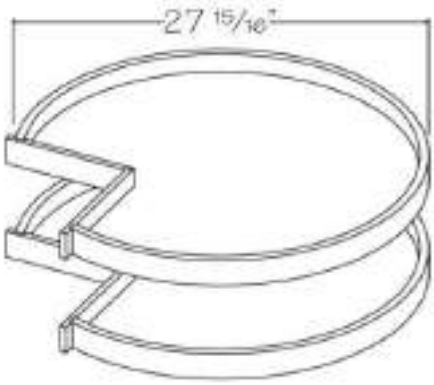

Order Code: **TB33-36**

* Wooden tray is sold by piece, not set of 2

- Natural Wood Finish
- Rotating, pie-cut trays
- Trays are made of wood veneered plywood with a solid wood perimeter lip
- Undermount bearings allow for indepedent rotation and full access to trays

NOTES

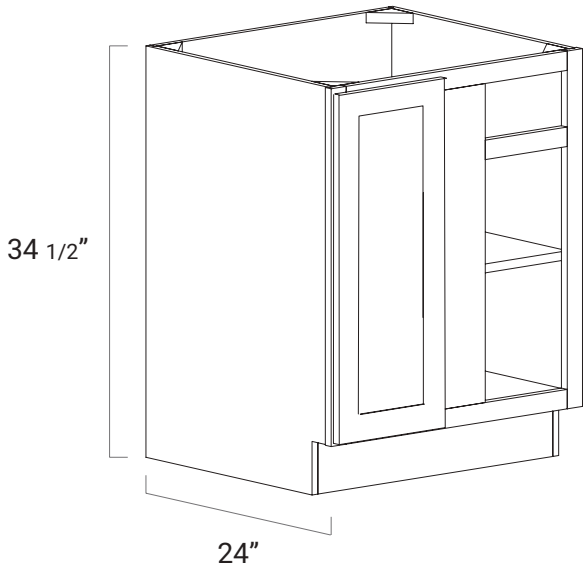

Base Blind Corner

Order Code: **BBC36**

●	SW
●	SG
●	SE
●	CS
●	CW
●	PW
●	YC
●	AG

- One adjustable shelf
- Door and drawer can be flipped for left or right application
- 3” filler included
- Hinges are located on the center stile of the face frame and can be flipped as necessary
- Same size door, drawer, and door opening as **BT9**.

INSTALLATION DIAGRAM (BBC39 SHOWN)

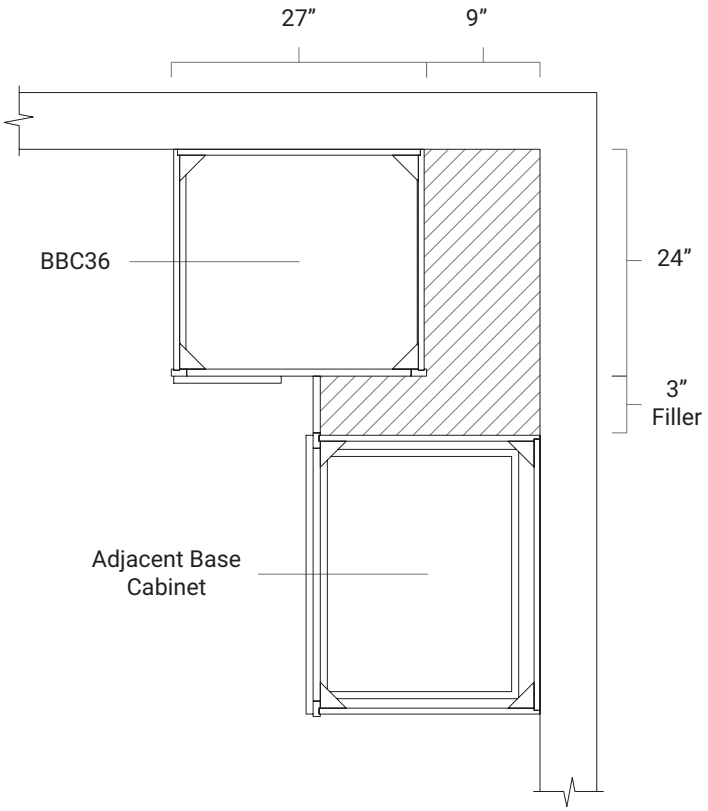

FACE FRAME OPENING DIMENSIONS

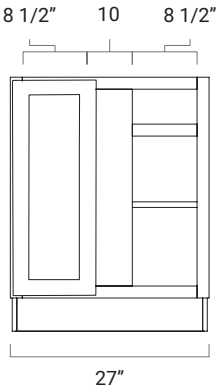

Base Blind Corner

Order Code: **BBC42**

- One adjustable shelf
- Cabinet is 39” wide and must be pulled a minimum of 3” or a maximum of 9” from adjacent wall
- Door and drawer can be flipped for left or right application
- 3” filler included
- Hinges are located on the center stile of the face frame and can be flipped as necessary
- Same size door, drawer, and opening as **B15**

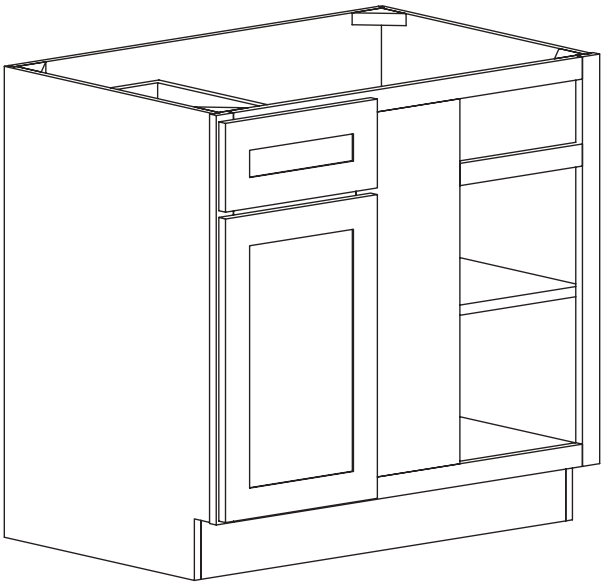

FACE FRAME
OPENING DIMENSIONS

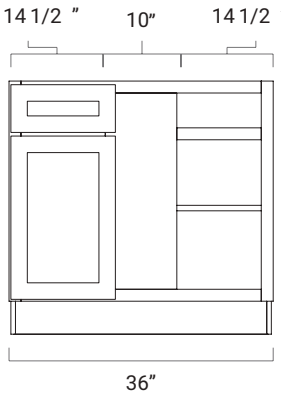

INSTALLATION DIAGRAM

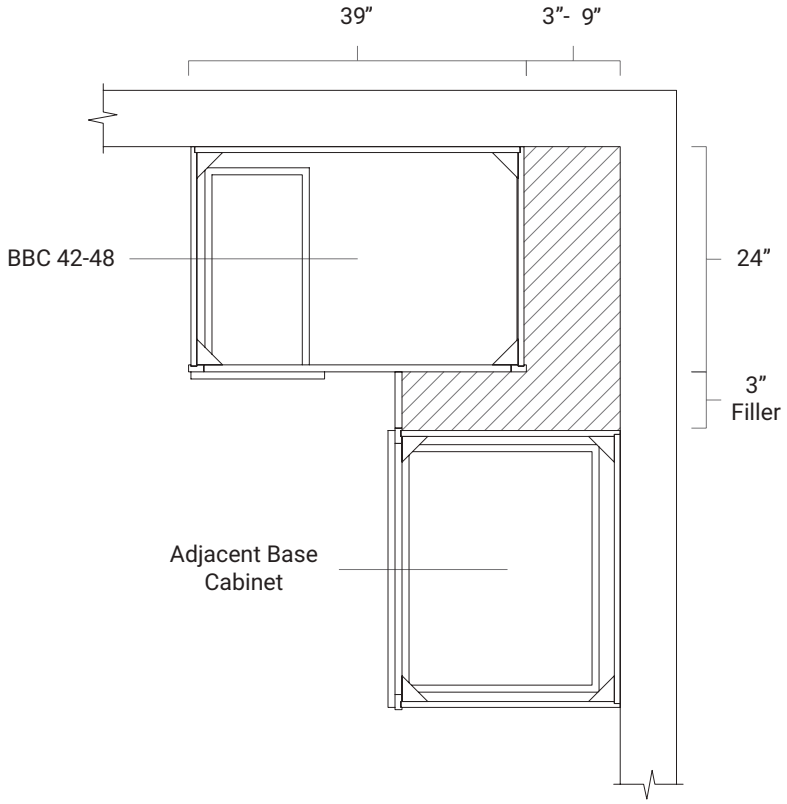

Can be pulled a minimum of 42” to a maximum of 48”
We suggest to pull only up to 45”
Minimum and maximum pull includes cabinet width

●	SW
●	SG
●	SE
●	CS
●	CW
●	PW
●	YC
●	AG

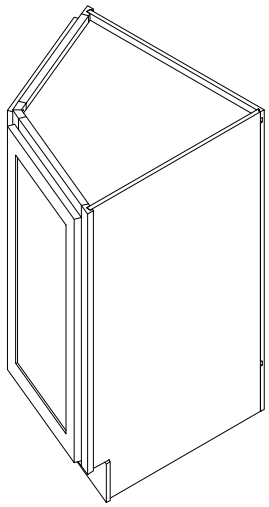

Angled End Base

Order Code: **BEC24**

- One adjustable shelf
- Full height door

●	SW
●	SG
●	SE
●	CS
●	CW
●	PW
●	YC
●	AG

TOP VIEW

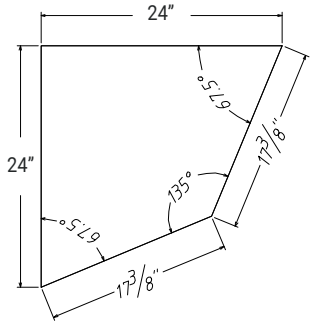

NOTES

SPECIAL BASE CABINETS

Knee Drawer

Order Code: **VKD36**

- Extended stiles of face frame allow for drawer to be cut down to 24” wide
- Side-mount, epoxy glides only
- Beveled outside edge

●	SW
●	SG
●	SE
●	CS
●	CW
●	PW
●	YC
●	AG

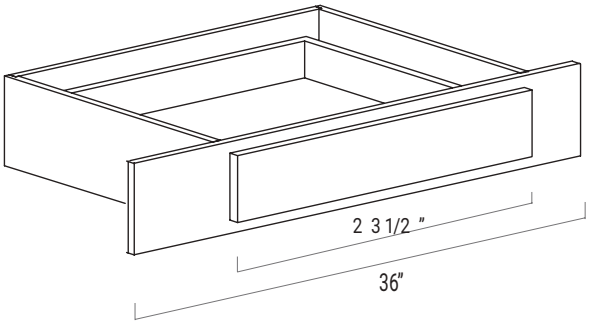

Base Spice Rack

Order Code: **BSPR**

●	SW
●	SG
●	SE
●	CS
●	CW
●	PW
●	YC
●	AG

9inch Only

- Pre-assembled
- 5-piece front
- Full extension glides without soft close
- Hardwood interior
- 20 5/8” shelf depth
- Requires decorative hardware to pull open
- Can hold a variety of spice container sizes

Base End Shelf

Order Code: **BOE12**

- Pre-assembled
- Stained or Painted to matching color
- Plywood Construction
- Loose TKC is included in the package

●	SW
●	SG
●	SE
	CS
	CW
	PW
	YC
●	AG

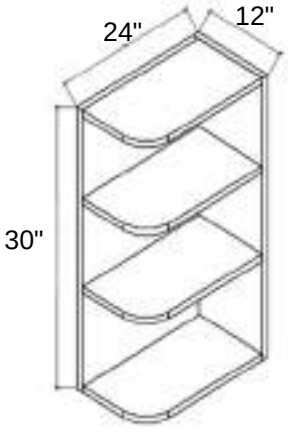

CABINET IDENTIFICATION

The letter or letters represent the type of cabinet, the first set of numbers represent the width of the cabinet, and the second set of numbers represents the height of the cabinet.

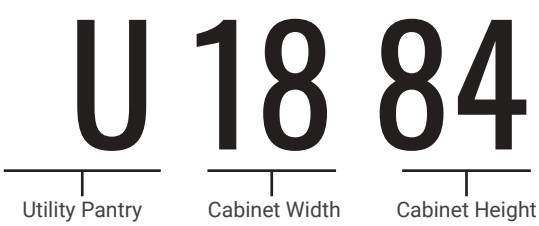

ORDER CODING

All tall cabinet order coding begins with door order code.
Example: **SW U1884**

SPECIAL NOTE

- Tall cabinets are 24" deep

*Our tall pantry is divided into BOTTOM&UPPER two portions, height of bottom portion is fixed at 54"

AVAILABILITY KEY

●	Indicates availability
	Indicates no availability

Utility Pantry Single Door

●	SW
●	SG
●	SE
●	CS
●	CW
●	PW
●	YC
●	AG

Order Code: **U1884 (U1854+U1830)**
U1890 (U1854+U1836)
U1896 (U1854+U1842)

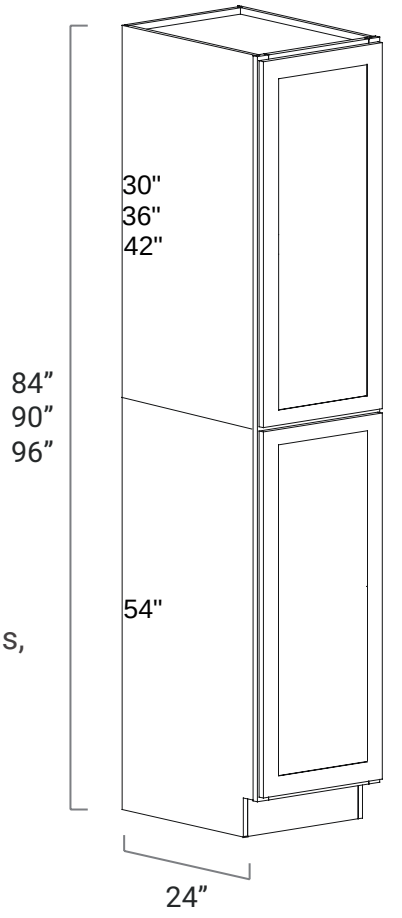

- Accepts 18” rollout trays (**RS18** pg. 54) (ordered separately)
- Apply the SCR or BAM or USV2496 to cover the seam.

*Our tall pantry is divided into LOWER&UPPER two portions, height of bottom portion is fixed at 54"

SKU	UPPER HEIGHTS	# OF SHELVES IN UPPER	# OF SHELVES IN LOWER
UP1884	30”	TWO	THREE
UP1890	36”	ONE	THREE
UP1896	42”	THREE	THREE

NOTES*

•By Stacking different upper portion of pantry, you can creat a pantry with unusal heights

For Example : **U1870 (U1836+U1830+TKC)**

U18118 (U1842+U1836+U1836+TKC)

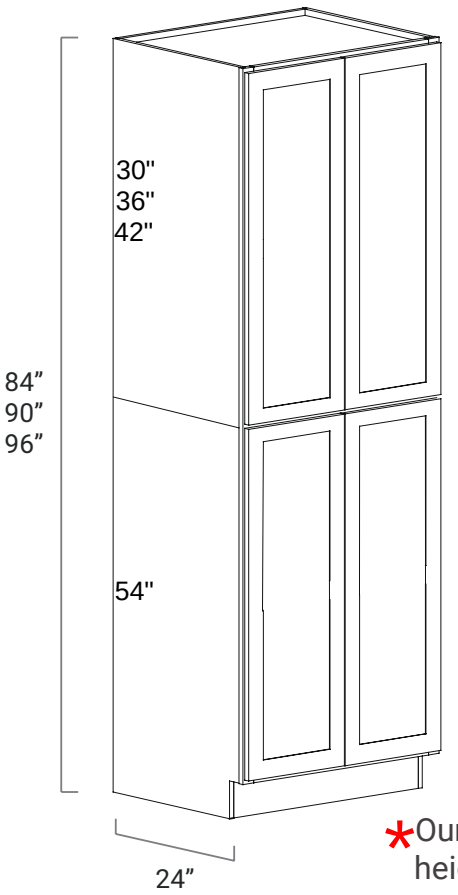

Utility Pantry Double Door

●	SW
●	SG
●	SE
●	CS
●	CW
●	PW
●	YC
●	AG

Order Code: **U2484 (U2454+U2430)**
U2490 (U2454+U2436)
U2496 (U2454+U2442)
U3084 (U3054+U3030)
U3090 (U3054+U3036)
U3096 (U3054+U3042)

- 24” wide pantries accept 24” rollout trays (**RS24** pg. 54)
- 30” wide pantries accept 30” rollout trays (**RS30** pg. 54)
- Apply the SCR or BAM or USV2496 to cover the seam.

*Our tall pantry is divided into LOWER&UPPER two portions, height of bottom portion is fixed at 54"

SKU	UPPER HEIGHTS	# OF SHELVES IN UPPER	# OF SHELVES IN LOWER
U2484	30”	TWO	THREE
U2490	36”	TWO	THREE
U2496	42”	THREE	THREE
U3084	30”	TWO	THREE
U3090	36”	TWO	THREE
U3096	42”	THREE	THREE

*NOTES

•By Stacking different upper portion of pantry, you can creat a pantry with unusal heights

For Example : **U2470 (U2436+U2430+TKC)**

U30118 (U3042+U3036+U3036+TKC)

SPECIAL TALL CABINETS

36" Stacked Utility Pantry

●	SW
●	SG
●	SE
●	CS
●	CW
●	PW
●	YC
●	AG

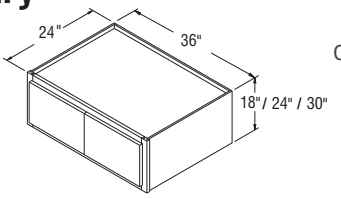

Order Code:
W361824
W362424
W363024

+

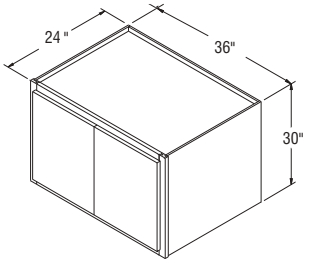

Order Code:
W363024

+

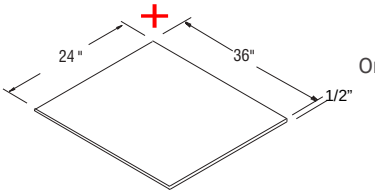

Order Code:
S2436

+

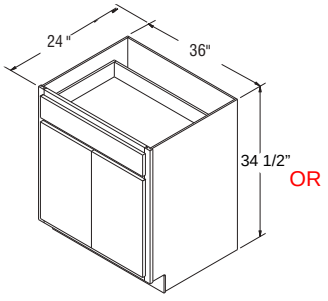

OR

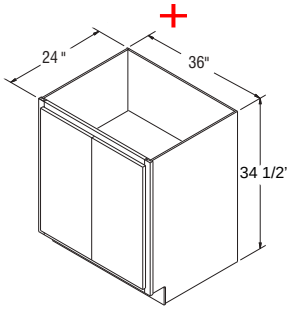

OR

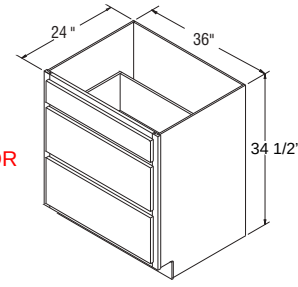

OR

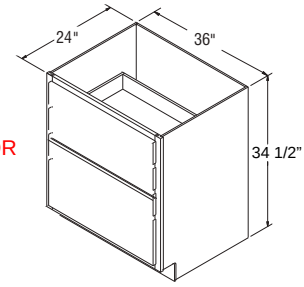

Order Code: **B36** **FHB36** **3DB36** **2DB36**

Single Oven Cabinet

Order Code: **O3384 (O3366+O331824)**
O3390 (O3366+O332424)
O3396 (O3366+O333024)

●	SW
●	SG
●	SE
●	CS
●	CW
●	PW
●	YC
●	AG

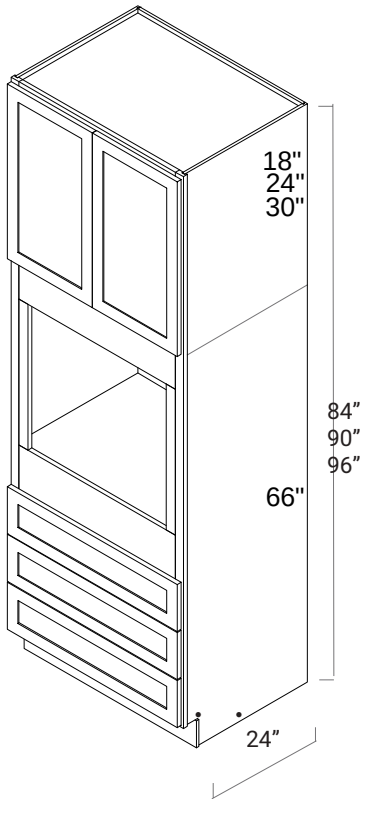

*Our Oven is divided into LOWER&UPPER two portions, height of bottom portion is fixed at 66"

CABINET IDENTIFICATION

The letter or letters represent the name of the cabinet, and the following set of numbers represents the width of the cabinet.

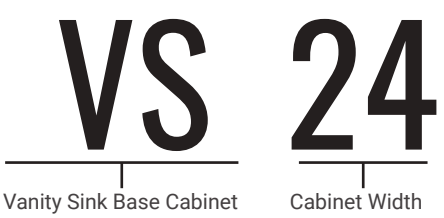

Whenever a bath cabinet has all drawers and no doors, also known as a drawer base, the cabinet coding will start with a number. This represents the number of drawers the cabinet has.

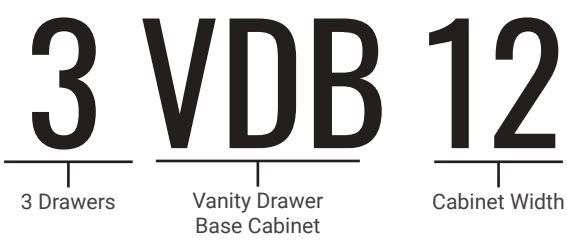

ORDER CODING

All bath cabinet order coding begins with the door order code.
Example: **AG VS30**

SPECIAL NOTES

*Bath cabinetry is 34 1/2" high and 21" deep

AVAILABILITY KEY

●	Indicates availability
	Indicates no availability

BATH CABINETS

Vanity Sink Base with 1 Door

Order Code: **VS18**
VS21

- SW
- SG
- SE
- CS
- CW
- PW
- YC
- AG

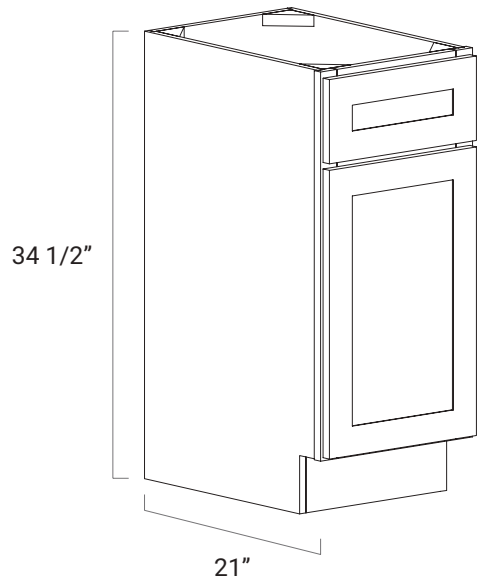

- No shelf
- For single bowl installation only
- One door
- Top drawer is a false door front

Vanity Sink Base with 2doors

Order Code: **VS24**
VS27
VS30
VS33

- SW
- SG
- SE
- CS
- CW
- PW
- YC
- AG

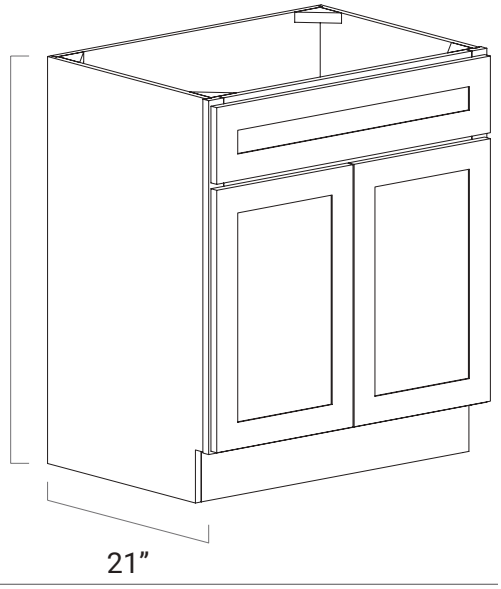

- No shelf
- For single bowl installation only
- Two doors
- Top drawer is a false door front

Vanity Combo Two Drawer / Door

Order Code: **V3021DL**(One door only)
V3021DR(One door only)

V3621DL (shown)
V3621DR

- SW
- SG
- SE
- CS
- CW
- PW
- YC
- AG

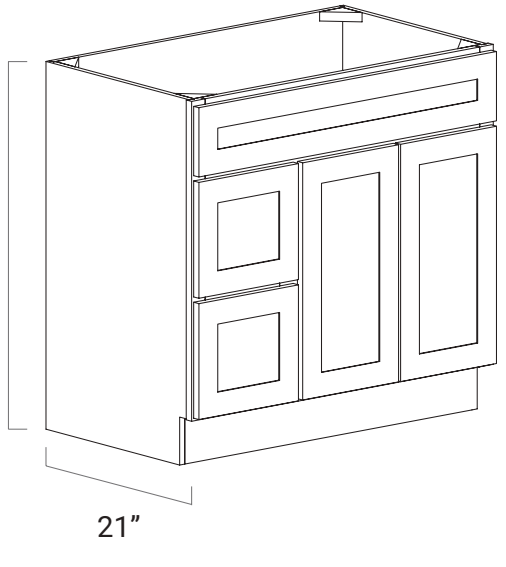

- No shelf
- For single bowl installation only
- Drawers remain a constant 12” wide
- Top drawer is a false drawer front
- Finished toe kick included (cut to size)

Bottom Drawer Vanity Base

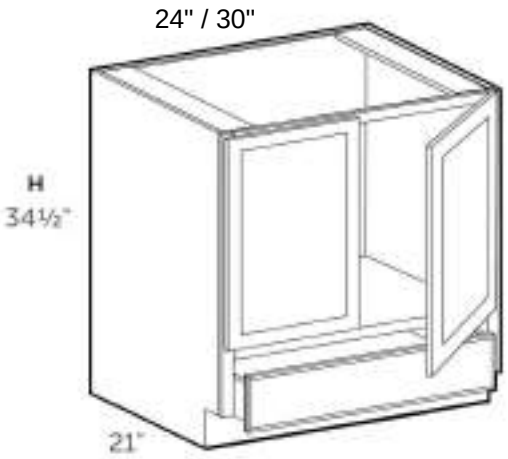

Order Code: **VSD24**
VSD27
VSD30

●	SW
●	SG
●	SE
●	CS
●	CW
●	PW
●	YC
●	AG

•One Functioning Drawer at the bottom
*Can be easily modified to be vanity base 24 or 30

Vanity Combo Six Drawer / Two Door

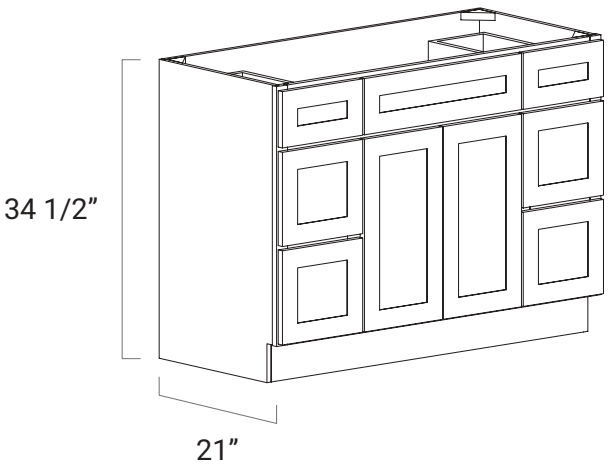

Order Code: **VDDB48**
will be discontinued

	SW
●	SG
●	SE
	CS
	CW
	PW
	YC
	AG

- No shelf
- For single bowl installation only
- Drawers remain a constant 12” wide
- Top middle drawer is a false drawer front
- Finished toe kick included (cut to size)

Vanity Base With Drawers On Top

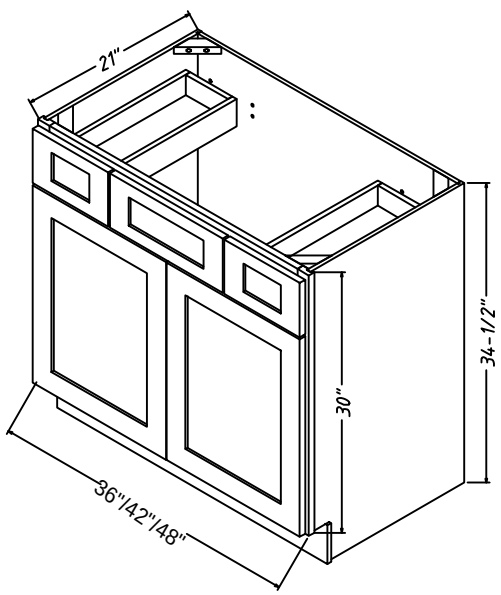

Order Code: **VSD36**
VSD42
VSD48

●	SW
●	SG
●	SE
●	CS
●	CW
●	PW
●	YC
●	AG

- Finished toe kick included (cut to size)

BATH CABINETS

Vanity Drawer Base Three Drawer

Order Code: **3VDB12**
3VDB15
3VDB18
3VDB21
3VDB24*
3VDB27*

- SW
- SG
- SE
- CS
- CW
- PW
- YC
- AG

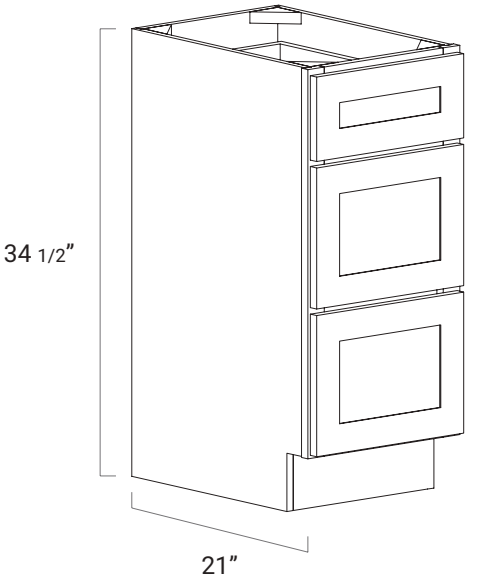

- Two deep drawers
- Top drawer aligns with standard base cabinetry

*Stackable, Pls call for availability

Vanity Roll Out

Order Code: **SBROXX**

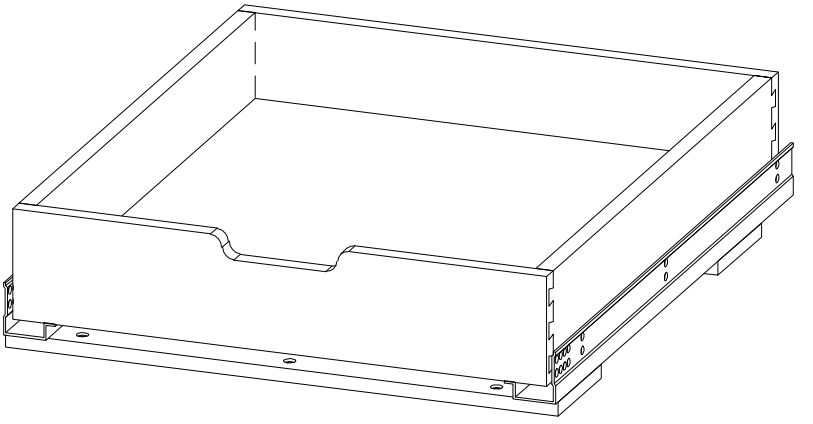

- Pre-assembled, Hand Polished
- 3/4" thick, solid wood
- Under Mount Rail

Model No.	Net Width (W1)	Width with Rail (W2)
SY-SBR024	20" (508mm)	20-5/8" (524mm)
SY-SBR027	23" (584mm)	23-5/8" (600mm)
SY-SBR030	26" (660mm)	26-5/8" (676mm)
SY-SBR033	29" (736mm)	29-5/8" (752mm)
SY-SBR036	32" (812mm)	32-5/8" (828mm)

ORDER CODING

All panel and skin order coding begins with door order code.
Example: **PW DWR**

SPECIAL NOTES

- Consider grain direction when designing
- Use **BAM**, **OCM** and **SCR** to finish seams, end of runs, and corners where panels meet

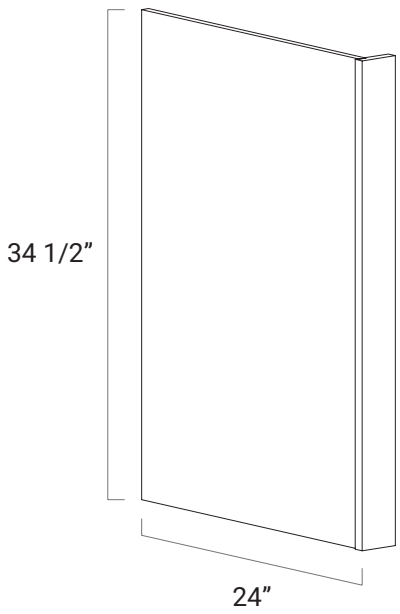

Dishwasher Panel

Order Code: **DWR**

●	SW
●	SG
●	SE
●	CS
●	CW
●	PW
●	YC
●	AG

- Intended for use next to a dishwasher
- 3/4” thick, veneered plywood panel, finished on outside
- Panel bored for assembly along one unfinished side
- 3/4” thick, solid wood return filler, finished on front and sides

TOP VIEW

PANELS AND SKINS

Refrigerator Panel

Order Code: **REPV2496**
+
F1.5*

●	SW
●	SG
●	SE
●	CS
●	CW
●	PW
●	YC
●	AG

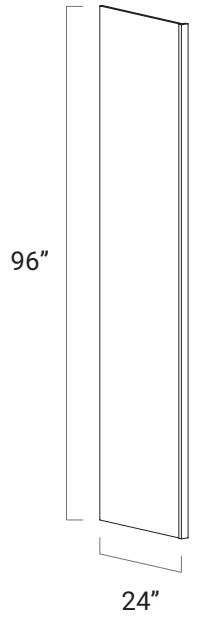

- Intended for use next to or flanking a refrigerator to conceal sides and support wall cabinetry above the appliance
- 1/2” thick, veneered plywood panel, finished on both sides
- Panel bored for assembly along one side
- 3/4” thick, solid wood return filler, finished on front and sides

***F1.5** needs to be ordered seperately.

Refrigerator panels can be cut to fit in the field and used as a shelving solution for many design situations.

TOP VIEW

Matching Color Shelf Board

Order Code: **S2496**

●	SW
●	SG
●	SE
●	CS
●	CW
●	PW
●	YC
●	AG

- Both Sides are finished
- All Edges are finished
- 3/4" Thick

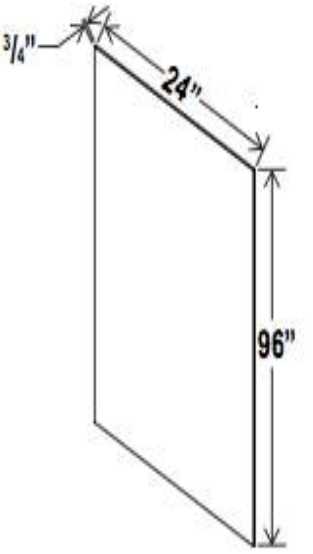

(*) For stained finish, construction is either veneered plywood or MDF core. For painted finish, construction is MDF core.

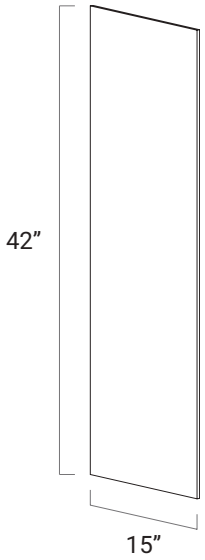

Wall Skin*

Order Code: **WSV42**

- 1/4” thick
- One finished side
- Intended for skinning sides of wall cabinetry
- Cut width and height to fit
- Used to make sure side of cabinet is flush with frame

●	SW
●	SG
●	SE
●	CS
●	CW
●	PW
●	YC
●	AG

Use **WSV42** *to flush sides before applying a decorative wall false door.*

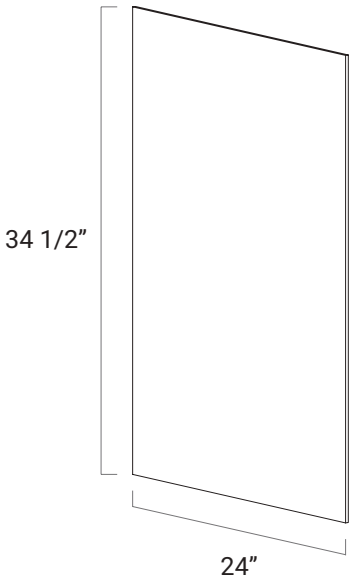

Base Skin*

Order Code: **BSV**

- 1/4” thick
- One finished side
- Intended for skinning sides of base cabinetry
- Cut width and height to fit
- Notch for toe kick in field as necessary
- Used to make sure side of cabinet is flush with frame

●	SW
●	SG
●	SE
●	CS
●	CW
●	PW
●	YC
●	AG

Use **BSV** *to flush sides before applying a decorative base false door.*

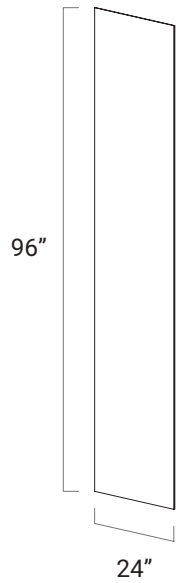

Tall Skin*

Order Code: **USV2496**

- 1/4” thick
- One finished side
- Intended for skinning sides of tall cabinetry
- Cut width and height to fit
- Notch for toe kick in field as necessary
- Used to make sure side of cabinet is flush with frame

●	SW
●	SG
●	SE
●	CS
●	CW
●	PW
●	YC
●	AG

(*) For stained finish, construction is either veneered plywood or MDF core. For painted finish, construction is MDF core.

Island Back Skin*

Order Code: **FPV3696**
FPV4296

- 1/4” thick
- One finished side
- Intended for skinning exposed backs of peninsulas, islands, and other design applications

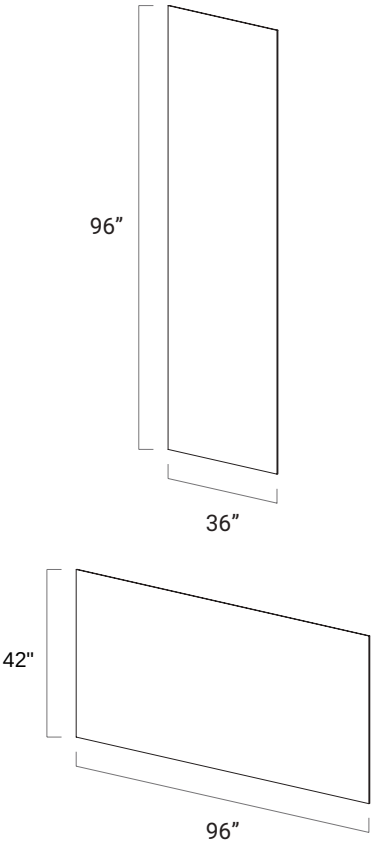

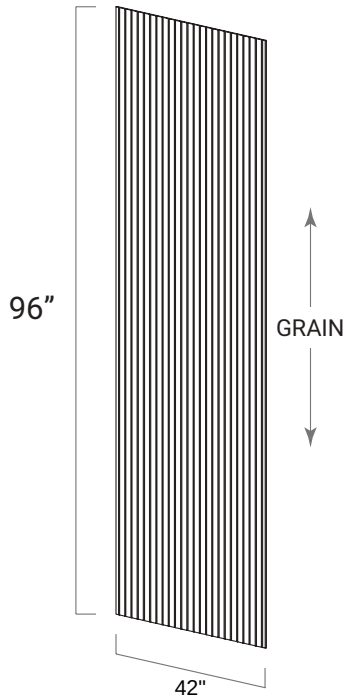

TOP VIEW

Island Back Skin Beadboard*

Order Code: **BBFPV4296**

- 1/4” thick
- One finished side
- Intended for skinning exposed backs of peninsulas, islands, or exposed sides of cabinetry
- A bead pattern is created by two routed grooves in the finished side of the skin
- Panels require trimming in the field

●	SW
	SG
●	SE
●	CS
●	CW
	PW
●	YC
	AG

*When butting two panels side-by-side, disguise the cut in a routed groove or apply **BAM** (pg. 46) for seam coverage.*

(*) For stained finish, construction is either veneered plywood or MDF core. For painted finish, construction is MDF core.

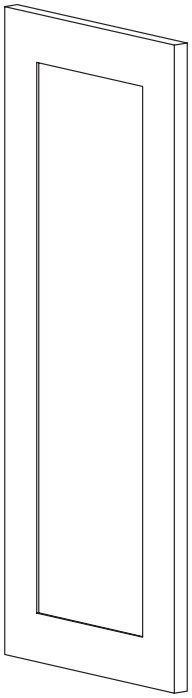

Wall Decorative Door**

Order Code: **WDEP30**
WDEP36
WDEP42

●	SW
●	SG
●	SE
●	CS
●	CW
●	PW
●	YC
●	AG

- False door matches ordered door style
- 3/4" thick, decorative door panel for finishing sides of exposed cabinetry
- Back of the panel is flat and requires a **WSV42** (pg. 39) to sit flush on cabinet side

ACTUAL DOOR SIZES

SKU	WIDTH	HEIGHT	DEPTH
WDEP30	11 1/2"	29 1/2"	3/4"
WDEP36	11 1/2"	35 1/2"	3/4"
WDEP42	11 1/2"	41 1/2"	3/4"

*(**) There is a plus or minus 1/4" tolerance on **WDEP***
Use to finish the backs of islands for a complete design.

Base Decorative Door**

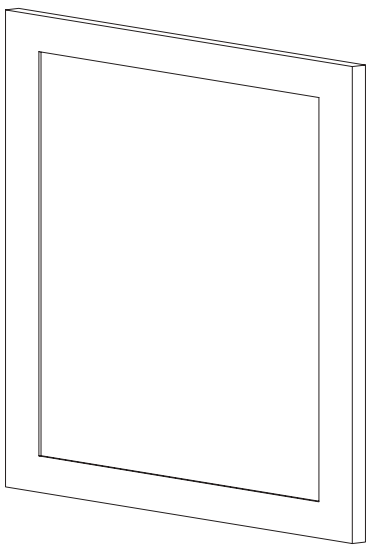

Order Code: **BDEP**

●	SW
●	SG
●	SE
●	CS
●	CW
●	PW
●	YC
●	AG

- False door matches ordered door style
- 3/4" thick, decorative door panel for finishing sides of exposed cabinetry
- Back of the panel is flat and requires a **BSV** (pg. 39) to sit flush on cabinet side

ACTUAL DOOR SIZES

SKU	WIDTH	HEIGHT	DEPTH
BDEP	23 1/2"	29 1/2"	3/4"

*(**) There is a plus or minus 1/4" tolerance on **BDEP***
Use to finish the backs of islands for a complete design.

PANELS AND SKINS

Pantry Decorative Door**

Order Code: **TDEP2484**
TDEP2490
TDEP2496

- False door matches ordered door style
- 3/4" thick, decorative door panel for finishing sides of exposed cabinetry
- Back of the panel is flat and requires a **USV2496** to sit flush on cabinet side

●	SW
●	SG
●	SE
●	CS
●	CW
●	PW
●	YC
●	AG

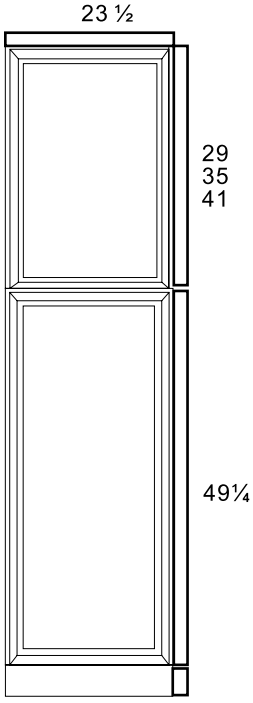

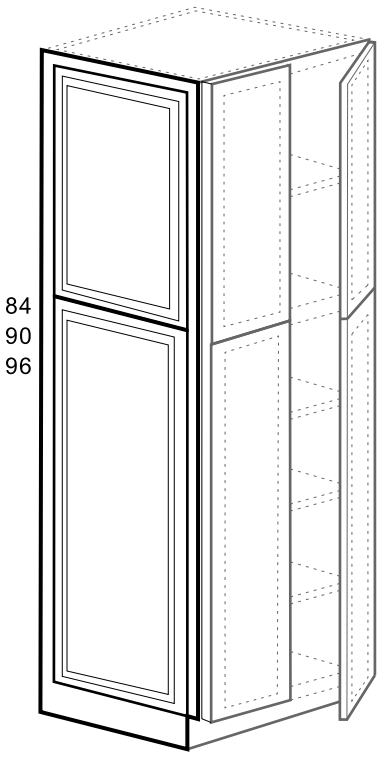

*(**) There is a plus or minus 1/4" tolerance on **TDEP** Use to finish the backs of islands for a complete design.*

Vanity Base Decorative Door**

Order Code: **VDEP**

- False door matches ordered door style
- 3/4" thick, decorative door panel for finishing sides of exposed cabinetry
- Back of the panel is flat and requires a **BSV** to sit flush on cabinet side

●	SW
●	SG
●	SE
●	CS
●	CW
	PW
●	YC
●	AG

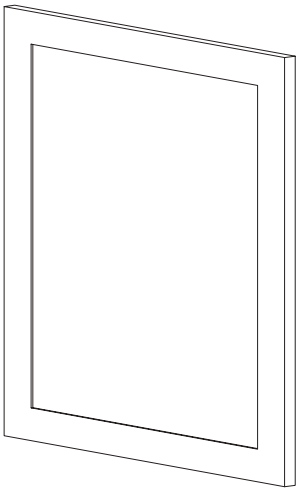

ACTUAL DOOR SIZES

SKU	WIDTH	HEIGHT	DEPTH
VDEP	20 1/2"	29 1/2"	3/4"

ORDER CODING

All molding and trim order coding begins with door order code.
Example: **PW CM8**

MOLDING CONSTRUCTION KEY

Solid wood

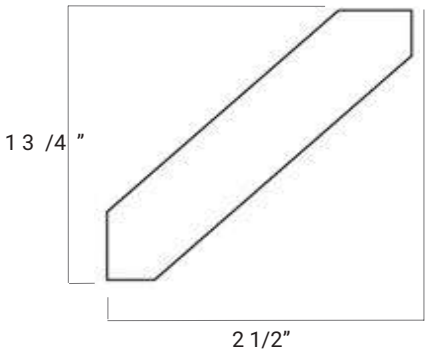

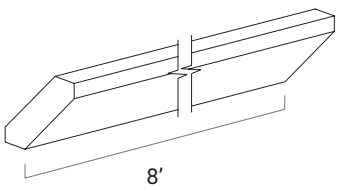

Angled Crown Molding

Order Code: **ACM8**

- Solid wood
- Molding comes in a single 8’ piece

●	SW
	SG
●	SE
●	CS
●	CW
	PW
	YC
	AG

Can be installed flat for 3/4”smaller molding or flat as 3/4” light rail

---

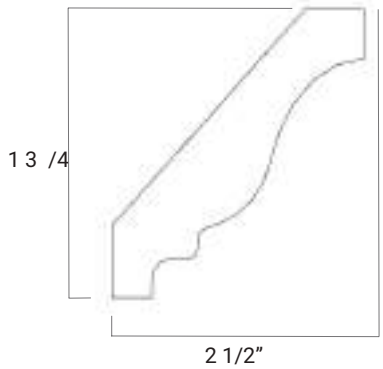

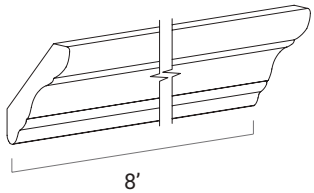

Crown Molding

Order Code: **CM8**

- Solid wood
- Molding comes in a single 8’ piece

●	SW
●	SG
●	SE
●	CS
●	CW
●	PW
●	YC
●	AG

Decorative Crown Molding

Order Code: **DCM**

- Solid wood
- Molding comes in a single 8’ piece

●	SW
●	SG
●	SE
●	CS
●	CW
●	PW
●	YC
●	AG

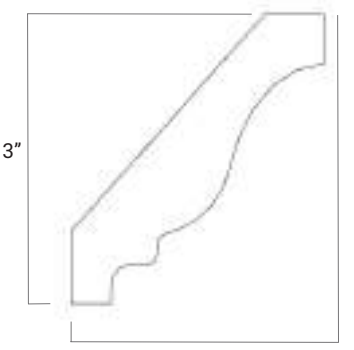

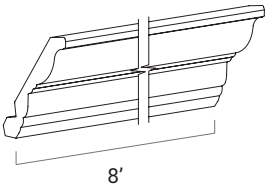

Insert Crown Molding

Order Code: **ICM**

- Solid wood
- Molding comes in a single 8’ piece
- 7/8” section accepts applied decorative inserts

●	SW
	SG
●	SE
●	CS
●	CW
●	PW
●	YC
●	AG

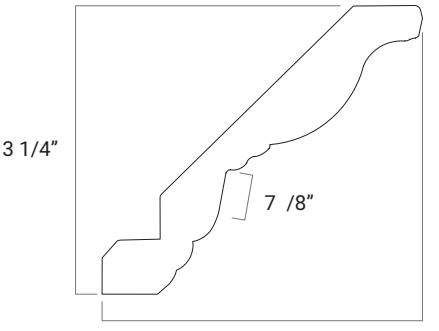

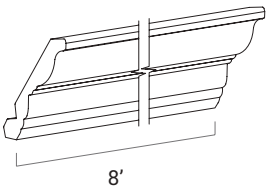

Rope Molding

Order Code: **ROPE**

- Solid wood
- Molding comes in a single 8’ piece

●	SW
	SG
●	SE
●	CS
●	CW
●	PW
●	YC
●	AG

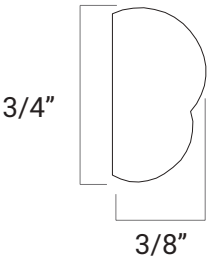

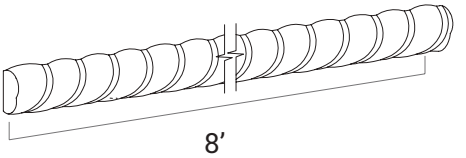

Can be applied to **ICM** .

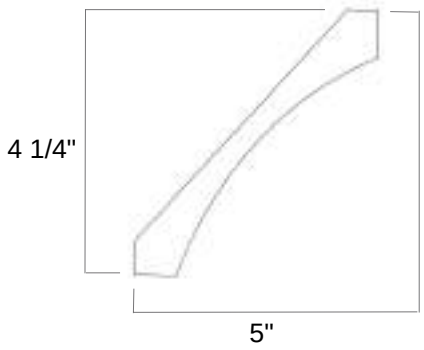

Cove Molding

Order Code: **COV**

- Solid wood
- Molding comes in a single 8’ piece
- Contempporary Style

●	SW
●	SG
●	SE
●	CS
●	CW
●	PW
●	YC
●	AG

*SG has COV2.5 and COV 3.5 available

Countertop Edge Molding

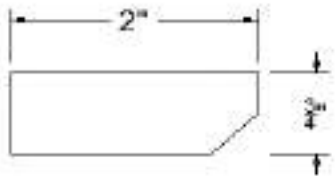

Order Code: **CTM8**

- Solid wood
- Molding comes in a single 8’ piece

●	SW
	SG
	SE
	CS
	CW
	PW
	YC
	AG

***CTM8** *also can be used as Light Rail Molding, or Crown Molding,* or Edge Molding for skinning the wall bottom

Outside Corner Molding

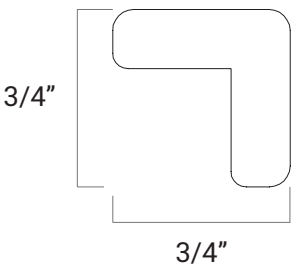

Order Code: **OCM**

- Solid wood
- Molding comes in a single 8’ piece

●	SW
●	SG
●	SE
●	CS
●	CW
●	PW
●	YC
●	AG

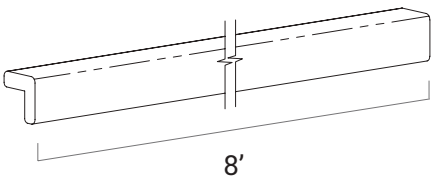

Intended to finish outside corners concealing the seams where two skins or panels meet.

Batten Molding

Order Code: **BAM**

- Solid wood
- Molding comes in a single 8’ piece

●	SW
●	SG
●	SE
●	CS
●	CW
●	PW
●	YC
●	AG

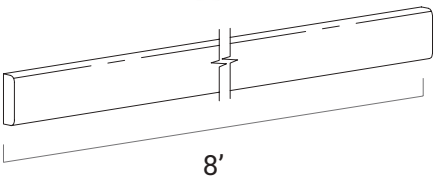

Intended to finish seams where two skins or panels meet.

Shoe Molding

Order Code: **SHM**

- Solid wood
- Molding comes in a single 8’ piece

●	SW
●	SG
●	SE
●	CS
●	CW
●	PW
●	YC
●	AG

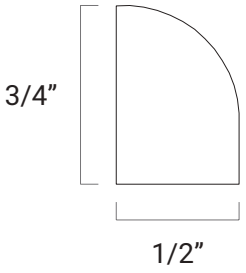

Intended to finish the base of cabinetry, backs of islands, or peninsulas where skin or toe kick meets flooring.

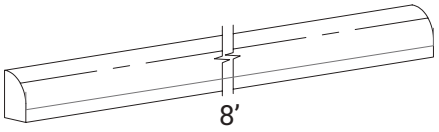

Scribe Molding

Order Code: **SCR**

- Solid wood
- Molding comes in a single 8’ piece

●	SW
●	SG
●	SE
●	CS
●	CW
●	PW
●	YC
●	AG

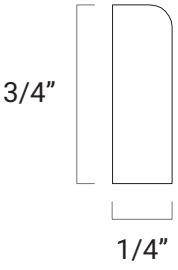

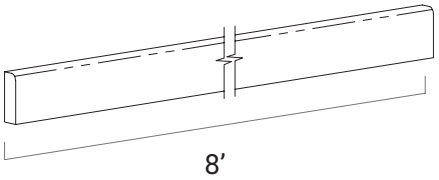

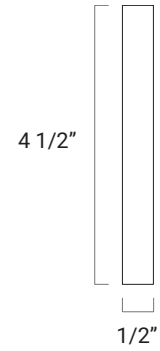

Toe Kick

Order Code: **TK8**

- 1/2” thick, veneered plywood
- Molding comes in a single 8’ piece

●	SW
●	SG
●	SE
●	CS
●	CW
●	PW
●	YC
●	AG

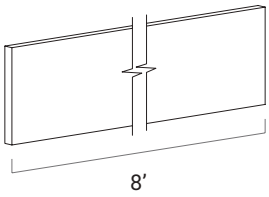

Furniture Base Molding

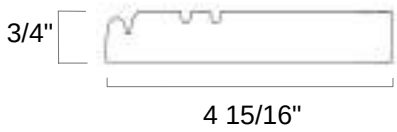

Order Code: **FBM**

- Solid wood
- Designed for use as a decorative baseboard, or a starter molding for stacking crown to the ceiling

●	SW
●	SG
●	SE
●	CS
●	CW
●	PW
●	YC
●	AG

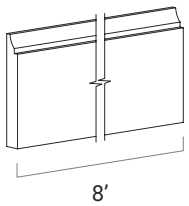

CROWN INSTALL DIAGRAM

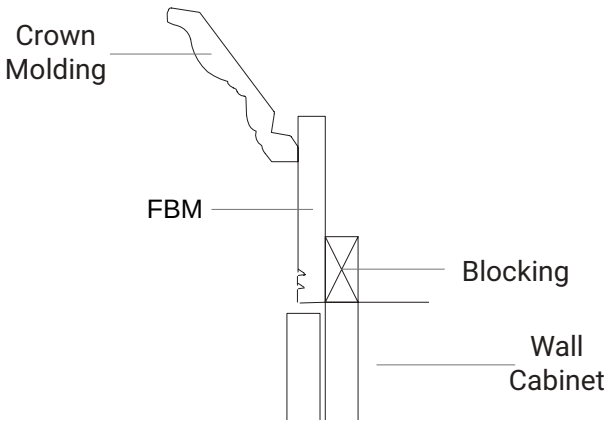

BASE INSTALL DIAGRAM

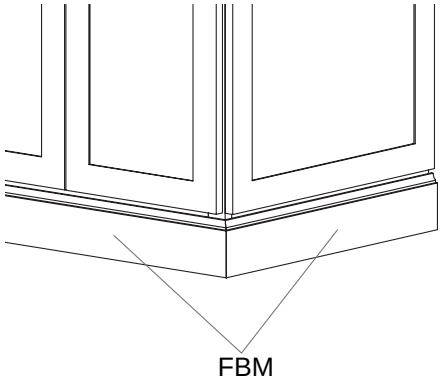

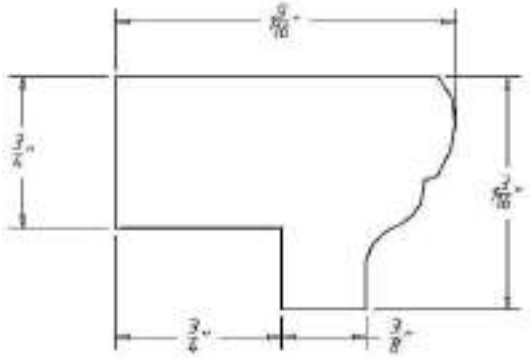

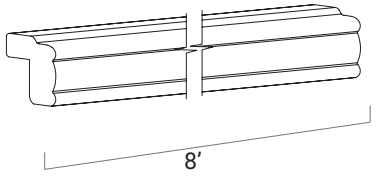

Traditional Light Rail

Order Code: **LRM**

- Solid wood
- Molding comes in a single 8' piece
- Light rail is intended to be applied to the bottom of a wall cabinet

●	SW
●	SG
●	SE
●	CS
●	CW
●	PW
●	YC
●	AG

LRM *can be inverted and used as a unique top molding as well.*

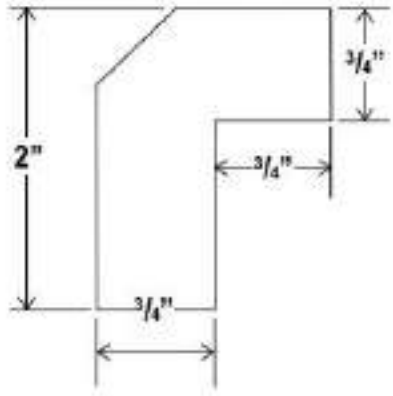

Traditional Angled Light Rail

Order Code: **ALRM**

- Solid wood
- Molding comes in a single 8' piece
- Light rail is intended to be applied to the bottom of a wall cabinet

●	SW
	SG
●	SE
	CS
	CW
	PW
	YC
	AG

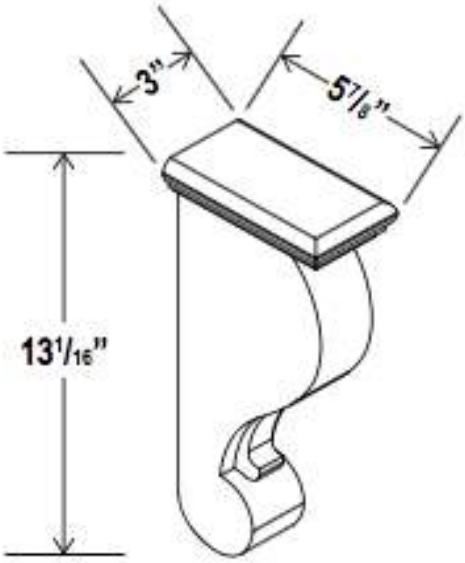

Classic Corbel

Order Code: **CBT**

- Solid wood

●	SW
●	SG
●	SE
●	CS
●	CW
●	PW
●	YC
●	AG

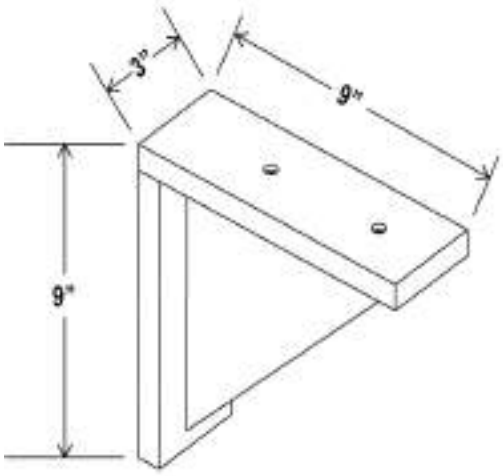

Simple Corbel

Order Code: **CB9**

- Solid wood

●	SW
●	SG
●	SE
●	CS
●	CW
●	PW
●	YC
●	AG

3" Wall Filler

Order Code: **WF342**

- Solid wood
- Also used as wall and tall filler
- Finished on all sides

●	SW
●	SG
●	SE
●	CS
●	CW
●	PW
●	YC
●	AG

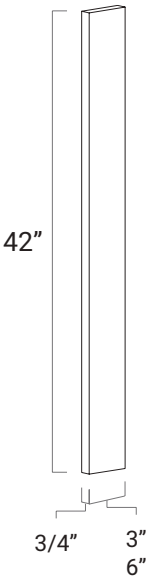

Arched Valance

Order Code: **VA48**

- Solid wood
- Can be cut down on either side

●	SW
●	SG
●	SE
●	CS
●	CW
●	PW
●	YC
●	AG

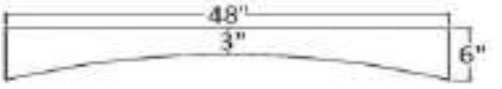

6" Wall Filler

Order Code: **WF642**

- 3/4” thick solid wood
- Finished front and sides
- Cut width/height to fit as necessary

●	SW
●	SG
●	SE
●	CS
●	CW
●	PW
●	YC
●	AG

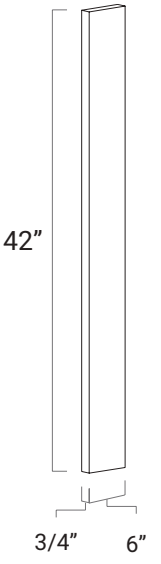

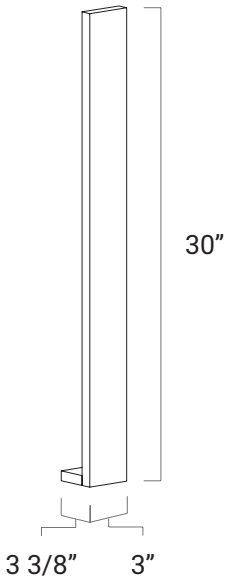

Base Filler

Order Code: **BF336**

●	SW
●	SG
●	SE
●	CS
●	CW
●	PW
●	YC
●	AG

- 3/4” thick solid wood
- Finished front, back, and sides
- Cut width/height to fit as necessary
- Must be used with full overlay door to prevent doors and hardware from binding on adjacent walls, deeper adjacent cabinetry, or corner applications

*Order **WF342** (pg. 50) for base filler applications not requiring the attached toe kick.*

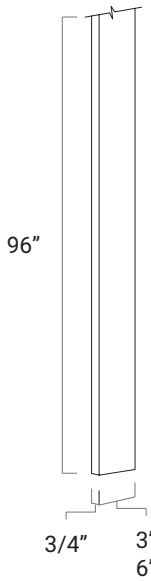

Tall Filler

Order Code: **TF396**
TF696

●	SW
●	SG
●	SE
●	CS
●	CW
●	PW
●	YC
●	AG

- 3/4” thick solid wood
- Finished front and sides
- Cut width/height to fit as necessary
- Must be used with full overlay door to prevent doors and hardware from binding on adjacent walls, deeper adjacent cabinetry, or corner applications

Can be used as starter molding to build crown to the ceiling.

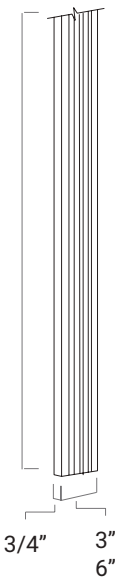

Tall Flute Filler

Order Code: **BBF396**

●	SW
●	SG
●	SE
●	CS
●	CW
●	PW
●	YC
●	AG

- 3/4” thick solid wood
- Finished front and sides
- Cut width/height to fit as necessary
- Must be used with full overlay door to prevent doors and hardware from binding on adjacent walls, deeper adjacent cabinetry, or corner applications

Decorative Leg

Order Code: **CLDL**

- Solid wood

●	SW
●	SG
●	SE
●	CS
●	CW
●	PW
●	YC
●	AG

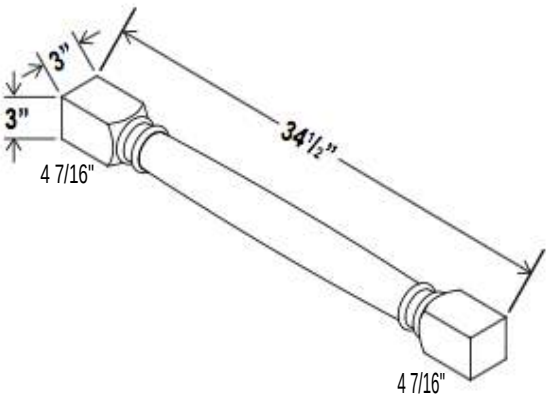

Decorative Leg

Order Code: **FLDL**

- Solid wood

●	SW
●	SG
●	SE
●	CS
●	CW
●	PW
●	YC
●	AG

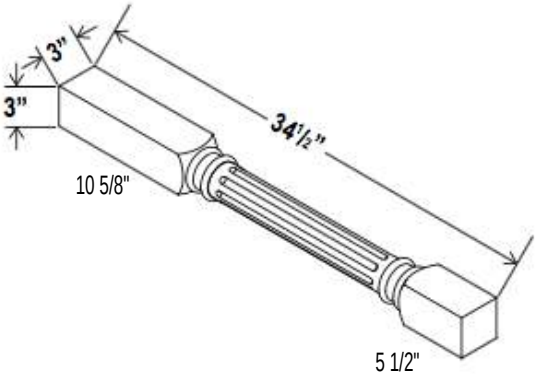

Split Decorative Leg *Pls call for availability

Order Code: **SDL**

- Solid wood
- Trimmable up to 6” from the top
- When installing on a 3 1/2” wide filler, be sure to adjust hinges on adjacent doors to eliminate possible binding on the decorative leg

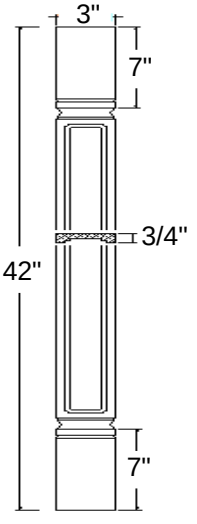

●	SW
	SG
	SE
	CS
	CW
●	PW
	YC
●	AG

Bun Feet

* Pls call for availability

Order Code: **BFT**

- Solid wood

STYLE	HEIGHT	WIDTH
Squared	4 1/2”	4 1/2”

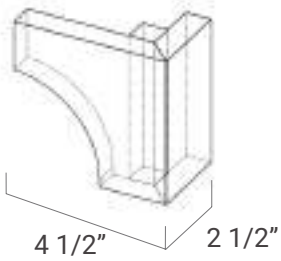

Touch-Up Marker

Order Code: **TUK**

- Felt-tipped marker filled with stain or paint
- For small scuffs or scratches

●	SW
●	SG
●	SE
●	CS
●	CW
●	PW
●	YC
●	AG

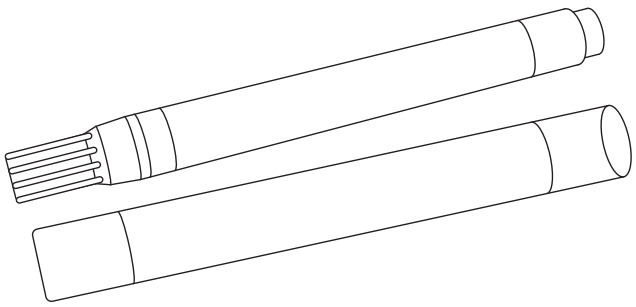

Roll outs

ORDER CODING

Example: **RS30**

SPECIAL NOTE

• Sold separately from cabinets

Roll Out Tray

Order Code: **RS18**

RS21 **RS24**
RS27 **RS30**
RS33 **RS36**

• Solid wood, dovetail construction
• 2 1/2” high sides
• Sidemount, full extension glides
• For 24” deep cabinets

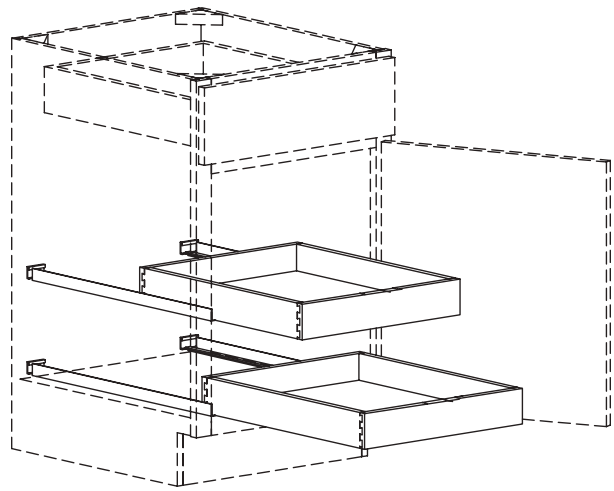

Trash Pull Out
Single Standard Base

Order Code: **BTPO15**

- Solid wood, dovetail base support
- Undermount, full extension glides with soft close
- Comes with one 35 quart waste container
- Can be fitted in B15

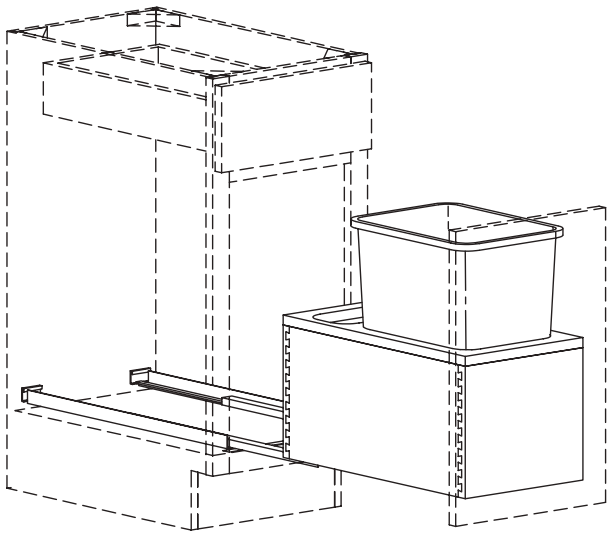

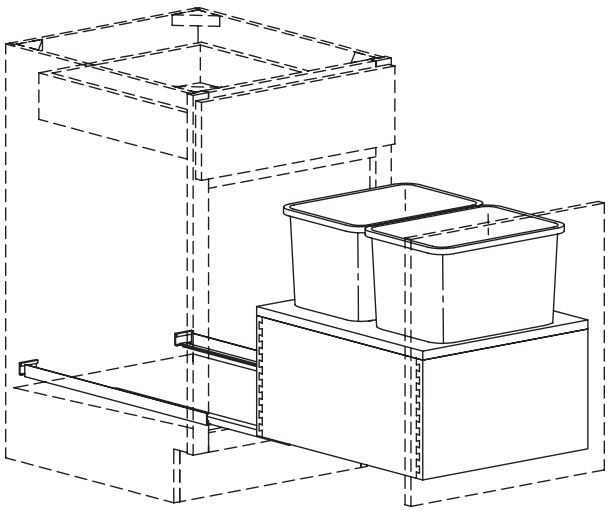

Trash Pull Out
Double Standard Base

Order Code: **BTPO18**

- Solid wood, dovetail base support
- Undermount, full extension glides with soft close
- Comes with two 30 quart waste containers
- Can be fitted in B18

Bar Pull

Order Code: **AC-H625**

Stainless Steel Bar Pull

LENGTH	WIDTH	PROJECTION	CTC	QTY.
6 1/8”	1/2”	1 3/8”	3 3/4”	25

6-Way Adjustable, Soft Close Hinge

Order Code: **AC-SCH125**

- Built-in, soft close feature

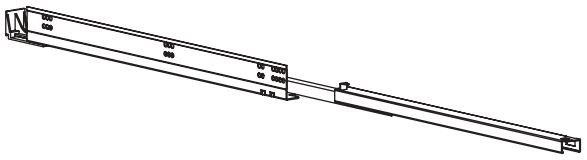

Soft Close, Undermount Glide Pair

Order Code: **AC-RAIL15**
AC-RAIL18
AC-RAIL21

- Full extension
- Undermount
- Soft close
- Numbers indicate cabinet depth not glide depth

How to Clean Your Cabinets

The finish on Sandi Cabinet cabinetry is just like that of a high quality piece of furniture. Although it is designed to protect against normal, every day home use, general upkeep, and cleanliness are very important. With proper care, your cabinetry will look great for generations to come.

Dusting

Dust your cabinets frequently with a soft, lint-free cloth. If need be, slightly dampen the cloth with water or a spray-type dust remover.

Spills

Clean spills and splatters immediately. Prolonged exposure to spills, including food, water, oil, grease, and other liquids, can cause permanent discoloration and/or damage to your cabinet's finish. To clean spills, use a clean, soft cloth dampened with mild soap. Dry immediately with another clean, soft cloth.

Cleaning

Use a clean, soft cloth dampened with mild soap to clean your cabinets. Dry immediately with another clean, soft cloth. There are also a variety of wood cleaning products available for use on cabinetry.

Waxing & Polishing

Waxing your cabinets is not required or recommended. Over time, the wax will build up on the surface of the cabinet. This can cause a hazy, streaky, or yellowed appearance, as well as attract dust particles. The wax can become very difficult to remove. We recommend that you clean and polish your cabinets once or twice each year. To polish your cabinets, use a light coat of quality furniture polish.

Glass Doors

If you have glass panels installed in your cabinet doors, you will want to clean them periodically. To clean the glass, you can use any commercial glass cleaner. Never apply glass cleaner directly to the glass. Spray a small amount of cleaner onto a clean, soft cloth or paper towel, then wipe the glass. Be careful not to damage the cabinet finish or hardware while cleaning.

Hardware

You will want to periodically clean knobs, pulls, or handles installed on your cabinet doors/ drawers. To do so, use a clean, soft cloth dampened with mild soap. Thoroughly dry all hardware joints, surfaces, and the surrounding area with another clean, soft cloth.

Products to Avoid

- Harsh chemicals
- Solvents or petroleum-based products, such as mineral spirits, nail polish removers, or paint thinners
- Abrasive cleaning products
- Ammonia or cleaning products that may contain ammonia
- Bleach or cleaning products that may contain bleach

CLEANING, CARE, AND MAINTENANCE

How to Care for Your Cabinets

Self-Cleaning Appliances

Self-cleaning appliances use intense heat during the clean cycle. During installation and with age, the integrity of the seal or gasket on the appliance can be compromised. Because of this, Sandi Cabinet recommends the removal of any cabinet doors and/or drawers located adjacent to or directly above the appliance during a cleaning cycle.

Heat-Producing Appliances

Mounting or placing heat-producing appliances beneath cabinets is not recommended. The excess heat and moisture from appliances, such as coffee makers and toaster ovens, can damage your cabinets.

UV Effects

Ultraviolet light rays from natural sunlight can affect the appearance of your cabinets. The appearance of your cabinet(s) may change over time depending on the natural characteristics of wood and the applied finish, the amount/direction of light exposure, and the portion of the cabinet that receives light.

Cabinet Maintenance

No matter how careful you are with your cabinetry, normal wear and tear from everyday use is inevitable. This is why Sandi Cabinet has made it easier than ever to keep your cabinets looking brand new.

Touch-Up

We offer touch-up markers and fill sticks that have been specially formulated for each of our high-quality cabinet fnishes. Your Sandi Cabinet design professional can assist you in how to order and how to use these products.

NOTE: *Substantial repairs may require the help of a professional refinisher.*

Adjusting Your Cabinetry Hardware

Over time, the door hinges, soft close pistons, drawer glides, and decorative hardware on your cabinetry may need to be tightened or adjusted. All of our hardware has been designed to be easily adjusted with a Phillips-head (crosshead) screwdriver. Soft close pistons are adjusted by simply turning the small dial on the backside of the piston with your finger.

Because we use real wood in our products, there are certain characteristics and qualities with which you may not be familiar. Because your satisfaction is our number one priority, we want to make sure you are fully aware of the important information listed below regarding our cabinetry and the applied finish.

Expansion & Contraction
Because half of the weight of freshly cut wood is water, these natural properties are such that they can react to climate or humidity changes in your home. Sandi Cabinet doors and face frames are manufactured from solid wood that has been carefully kiln-dried, retaining just enough moisture for proper construction and finishing. The center panels of the Sandi Cabinet doors are either wood or medium density fibreboard. As a product of nature, solid hardwoods continue to react to their surroundings long after the manufacturing process has been completed. When wood cabinet doors are in a warm, moist environment (high humidity), the wood expands. In a dry, colder environment (low humidity), the wood will contract. Even with humidity regulation, this phenomenon can be controlled, but it can never be completely eliminated.

Door panels are prone to minor expansion and contraction as seasonal temperature and humidity changes occur in a home. The contraction (shrinkage) of the center door panel during low humidity periods may result in the appearance of an unfnished line along the edge of the center panel. Sandi Cabinet does not consider the appearance of an unfinished line as a defect and will not replace doors due to this situation. It is recommended that a humidity control system is incorporated in a home to reduce the possibility of expansion and contraction in wood products. Touch-up markers are made available to cover this edge line. Oftentimes, touch-up for this issue may only be necessary within the first year.

Sandi Cabinet is not responsible for any of these conditions and variations.

Finishes
Over time, wood species in all finishes will exhibit color changes when exposed to different types of light and environment. Such color changes are to be expected and are not defects. Due to the natural variation and aging process of wood, minor differences may be observed in color match when replacing doors or adding cabinets at a later date. It is a characteristic of stained and painted wood finishes to age over time when exposed to smoke, sunlight, or general household cleaning chemicals.

Graining differences, mineral streaks, and wood color variations are expected in wood cabinetry and are not classified as defects. A newly installed kitchen could have these minor color variations.

Sandi Cabinet offers several types of painted finishes on cabinetry. Painted finishes are exceedingly different from the standard stained finish. Since normal movement is typical in wood products, certain climatic conditions can cause finish breaks, recesses, and joint/panel lines. Joint separation can be more visible on mitered doors. Consequently, in places and environments of extremely high or extremely low humidity, painted finishes are not recommended. Joint lines and variations are common attributes of painted finishes and will not be considered sufficient reasons for product replacement.

Some of our products have glaze finishes. Since glaze detailing is hand applied then hand wiped off, glaze may “hang up” or remain in any corners of the door or drawer profile. Because the glaze is a hand applied procedure, detailing can differ from piece to piece.

> ***NOTE:*** *Independent testing has shown that discoloration will develop on doors, drawers, and cabinet parts after continued exposure to tobacco smoke. This is remarkably apparent on white and lighter finishes. We do not warrant discoloration in our products due to exposure to smoke.*

Joint Lines
Expansion and contraction in doors and face frames can cause visible lines at the joints. The finish will still protect the surface, and the structural integrity of the joint will not be affected. An open joint line is not considered a defect.

WARRANTY

I. Description of Warranty

This warranty applies only to the original purchaser and is not transferrable. From the time of purchase, Sandi Cabinet offers an Industrial Standard 2-Years Warranty on all of its cabinetry. In addition to cabinetry, all drawers, shelves, roll out trays, and mechanical components are covered under the warranty as well. In the event that any Sandi Cabinet product fails during the course of normal use, Sandi Cabinet, at its discretion, will either repair or replace the defective product.

Whether the work was performed by a contractor, Sandi Cabinet authorized dealer, or you; any expenses involved in the shipping, removal, installation, or consequent damage of the defective product is not covered under this warranty. This warranty does not apply to products installed in mobile homes or recreational vehicles.

II. Intended Use of Product

To be covered by this warranty, the product must be used only for its intended purpose(s). Cabinets that have been improperly stored, installed, misused, modified, mishandled, and/or subject to excessive moisture or extreme temperature and humidity levels are not covered under this warranty. In addition, any damage caused by smoking and/or environmental/chemical effects are also not covered under this warranty.

III. Anticipated Variance in Product

The Sandi Cabinet warranty only applies to product defects and does not apply to properties of natural wood that are inherent in natural wood species. Any time you have a natural wood product, occurrences such as pinholes, knots, and variances in color or grain are normal and are not covered under this warranty.

Because half of the weight of freshly cut wood is water, its natural properties are such that they can react to climate and/or humidity changes in your home. Sandi Cabinet doors and face frames are manufactured from solid wood that has been carefully kiln-dried, retaining just enough moisture for proper construction and finishing. These hardwoods continue to react to their surroundings long after the manufacturing process has been completed. When wood cabinet doors are in a warm, moist environment (high humidity), the wood expands. In a dry, colder environment (low humidity), the wood will contract. Even with humidity regulation, this phenomenon can be controlled, but it can never be completely eliminated.

Door panels may also be prone to this minor expansion and contraction as seasonal temperature and humidity changes occur in your home. The contraction (shrinkage) of the center door panel during periods of low humidity may result in the appearance of an unfinished line along the edge of the center panel. Sandi Cabinet does not consider the appearance of this line as a defect and will not replace doors due to this situation. Touch-up markers are made available to cover this edge line. The installation of a humidity control system is recommended to reduce the possibility of expansion and contraction in wood products.

All Sandi Cabinet doors are manufactured in moisture-controlled environments under precise specifications. Although slight door warpage can be common in one or two doors within a newly installed kitchen, any door that has not been through a complete heating and cooling cycle has the possibility of warping. Slight warpage can be eliminated through hinge adjustments. Any warping that continues to occur should be further examined by removing the door from the cabinet and placing it on a flat surface. Hinge spacers are available through your authorized Sandi Cabinet dealer in cases where the

warpage cannot be eliminated through hinge adjustments. If warping cannot be eliminated through hinge adjustments or the use of hinge spacers, and if the doors have been through a complete heating and cooling cycle, and if all of the cabinets are true and plumb; then Sandi Cabinet will consider replacement.

As mentioned above, normal movement in wood products is typical. In addition to issues listed above, climate conditions can cause finish breaks, recesses, and joint/panel lines. An open joint line is not considered a defect and is not covered under this warranty.

IV. Product Repair or Replacement

Throughout the duration of the warranty period, Sandi Cabinet's sole obligation is to repair or replace any defective product at no charge. This warranty only applies to cabinets and affiliated products sold by Sandi Cabinet offered through an authorized Sandi Cabinet dealer. In the event that a claim is fled after the original product has been discontinued or cancelled, Sandi Cabinet will honor the warranty, at its discretion, subject to the availability of the product, by either:

- Repairing or replacing the defective product with a new product of the same style

OR

- Repairing or replacing the defective product with a product of equal value and complementary style in order to maintain the appearance of the original cabinetry purchase.

An exact match between the finish of the original purchased product and the replacement or repaired product is not guaranteed.

V. Rights of Consumer

There are no other warranties, disclosed or indicated, associated with this product. This document serves as a description of the consumer's definitive legal rights within the transaction and is the exclusive warranty of Sandi Cabinet. The exclusion or partial limitation of contingent or substantial damages is not permissible in some states. The consumer may also have further rights from state-to-state which are not cited in this warranty.

VI. Submission of a Claim

All claims must be submitted to the authorized Sandi Cabinet dealer where the cabinets were originally purchased. Claims are to be submitted in writing. Every claim must include a dated copy of the original sales receipt as proof of purchase. Unless and until the product is specifcally requested by the Sandi Cabinet Claims Department, please do not send the defective item(s).

INDEX

ACCESSORIES

Roll Out Tray 54
Trash Pull Out Double Standard Base 55
Trash Pull Out Single Standard Base 55

BASE CABINETS

Angled Full Height Base 27
Base Blind Corner (BBC36) 25
Base Blind Corner (BBC42) 26
Base Double Door 20
Base Spice Rack 28
Base End Shelf 28
Base Mircowave 27
Base Spice Drawer 20
Base Single Door 20
File Base 18" 21
Knee Drawer 28
Lazy Susan 23
Lazy Susan Turn Table 23
Sink Base 22
Sink Base Diagonal 22
Three Drawer Base 21
Two Drawer Base 21

BATH CABINETS

Vanity Sink Base 34
Vanity Sink Base One Drawer/One Door 34
Vanity Sink Base One Drawer/Two Doors 34
Vanity Combo Six Drawer/Two Door 35
Vanity With Bottom Drawer 35
Vanity Combo Two Drawer/Two Door 34
Vanity Drawer Base Three Drawer 36
Vanity Roll Out Tray 36
Vanity Base with Two Drawers On Top 35

CABINET CONSTRUCTION 5

CLEANING, CARE, & MAINTENANCE 69

DOOR STYLES

Shaker White 2
Shaker Grey 2

DOOR STYLES (continued)

Shaker Espresso 2
Charleston Saddle 3
Charleston Antique White 3
Charleston Pure White 3
York Chocolate 4

HARDWARE

Brushed Polished Nickel Pull 56
6-Way Adjustable, Soft Close Hinge 56

INDUSTRIAL STANDARD WARRANTY 60

MOLDING AND TRIM

Angled Crown Molding 43
Arched Valance 50
Base Filler 51
Batten Molding 46
Bull Nose Light Rail 45
Bun Feet 53
Classic Corbel 48
Countertop Edge Molding 48
COVE Molding 52
Decorative Crown Molding 44
Decorative Leg 52
Decorative Leg - Split 52
Furniture Base Molding 47
Insert Crown Molding 44
Outside Corner Molding 45
Rope Molding 44
Scribe Molding 46
Simple Corbel 49
Shoe Molding 46
Small Crown Molding 43
Toe Kick 47
Tall Filler 51
Traditional Light Rail 48
Wall Filler 50

OVEN UPPER CABINETS 8

INDEX

PANELS AND SKINS

Base Skin 39
Base Decorative Door 42
Dishwasher Panel 37
Island Back Skin 40
Island Back Skin Beadboard 40
Pantry Decorative Door 42
Refrigerator Panel 38
Shelf Board With Matching Color 38
Tall Skin 39
Tall Skin Beadboard 41
Vanity Base Decorative Door 42
Wall Decorative Door 41
Wall Skin 39

PRODUCT AND FINISH INFORMATION 71

TALL CABINETS

Single Oven Cabinet 32
Utility Pantry Single Door 18" 30
Utility Pantry Double Door 24"/30" 31
Utility Pantry Double Door Stacked 36" 32

TOUCH-UP 53

WALL CABINETS

Angled Triangle Wall 11
Cut Glass for Door 18
End Shelf Wall 11
Wall Blind Corner 14
Wall Bridge Double Door 12” High 7
Wall Bridge Double Door 15” High 7
Wall Bridge Double Door 18” High 7
Wall Bridge Double Door 21” High 8
Wall Bridge Double Door 24” High 8
Wall Bridge Refrigerator Double Door 24” Deep 9
Wall Diagonal Corner 12” Deep 12
Wall Diagonal Corner 15” Deep 13
Wall Double Door 30” High 10
Wall Double Door 36” High 10
Wall Double Door 42” High 11
Wall Easy Reach 16
Wall Microwave 17
Wall Range Hood Front 15
Wall Single Door 30” High 9
Wall Single Door 36” High 9
Wall Single Door 42” High 10
Wine Rack 17
Wine Glass Holder 18
Plate Rack 18